**State of Idaho**
**Department of Water Resources**

# Water Right License

**Water Right No. 98-8103**

**Priority**: October 24, 2022

**Maximum Diversion Rate:** 0.04 CFS
**Maximum Diversion Volume:** 3.0 AF

It is hereby certified that:

BEN AND PAULA DUNN LIVING TRUST PO BOX 1 COLBURN ID 83865-0001

has complied with the terms and conditions of the permit, issued pursuant to Application for Permit dated October 24, 2022, and has submitted Proof of Beneficial Use on November 30, 2023. An examination confirms water is diverted from:

**Source :** GROUND WATER

| Beneficial Use | Period of Use | Rate of Diversion | Annual Volume |
|---|---|---|---|
| IRRIGATION | 04/01 to 10/31 | 0.02 CFS | 2.4 AF |
| DOMESTIC | 01/01 to 12/31 | 0.04 CFS | 0.6 AF |

**Location of Point(s) of Diversion**
GROUND WATER NW¼ NW¼, Sec. 10, Twp 59N, Rge 01W, B.M. BONNER County

**Place of Use:** IRRIGATION

| Twp | Rng | Sec | NE | | | | NW | | | | SW | | | | SE | | | | Totals |
|---|---|---|---|---|---|---|---|---|---|---|---|---|---|---|---|---|---|---|---|
| | | | NE | NW | SW | SE | NE | NW | SW | SE | NE | NW | SW | SE | NE | NW | SW | SE | |
| 59N | 01W | 10 | | | | | | 0.8 | | | | | | | | | | | 0.8 |

Total Acres: 0.8

**Place of Use:** DOMESTIC

| Twp | Rng | Sec | NE | | | | NW | | | | SW | | | | SE | | | | Totals |
|---|---|---|---|---|---|---|---|---|---|---|---|---|---|---|---|---|---|---|---|
| | | | NE | NW | SW | SE | NE | NW | SW | SE | NE | NW | SW | SE | NE | NW | SW | SE | |
| 59N | 01W | 10 | | | | | | X | | | | | | | | | | | |

**Conditions of Approval**

1. Domestic use is for 1 home. Irrigation of lawn, garden and landscaping associated with the home is authorized under the irrigation component of this right.
2. This right when combined with all other rights shall provide no more than 0.02 cfs nor more than 2.4 afa at the field headgate for irrigation of the place of use.
3. This right does not grant any right-of-way or easement across the land of another.

This license is issued pursuant to the provisions of Idaho Code § 42-219. The water right confirmed by this license is subject to all prior water rights and shall be used in accordance with Idaho law and applicable rules of the Department of Water Resources.

Signed this 20th day of February, 2024.

PHILL HUMMER
Water Rights Section Manager

**State of Idaho**
**Department of Water Resources**

# Attachment to Water Right

**98-8103**

This map depicts the DOMESTIC & IRRIGATION place of use boundary for this water right at the time of this approval and is attached to the approval document solely for illustrative purposes.

01W

59N

0 400 800 Feet

Domestic Place of Use Boundary

IrrigationPlace Of Use Boundary

Townships

PLS Sections

Quarter Quarters

Point of Diversion

N

Form 42-217 Rev. 6/22

RECEIVED
NOV 30 2023
DEPARTMENT OF WATER RESOURCES

| FOR OFFICE USE ONLY | |
|---|---|
| Amt. of Fee $ | 50.00 |
| Receipt No. | C117437 |
| Receipted By | KM |
| Date Receipted | 11.30.23 |

STATE OF IDAHO
DEPARTMENT OF WATER RESOURCES

# STATEMENT OF COMPLETION

FOR SUBMITTING PROOF OF BENEFICIAL USE

The Idaho Department of Water Resources (Department) considers this form a statement that the permit holder(s) applied water to beneficial use and completed development of a water right to the extent described below. **This form must be accompanied by an examination fee, when necessary, or by a completed Beneficial Use Field Report prepared by a certified water right examiner (CWRE).** Please refer to the instructions and fee schedule for this form. If ownership of the permit has changed, complete a Notice of Change in Water Right Ownership form. If you wish to relinquish your permit because you have not established the authorized water use and are not applying for an extension, please notify the Department in writing.

**1.** Permit No. 98-8103 Name of Permit Holder(s) BEN AND PAULA DUNN LIVING TRUST

Telephone No. (208) 636-7473 Email DEB3414JD@YAHOO.COM

Mailing Address PO BOX 1 City COLBURN State ID Zip 83865

**2.** Source of Water GROUND WATER If Ground Water (well), Date Drilled mo. JUN 2 / yr. 1994

Drilling Permit/Tag No. NA Drilling Company's Name NA

**3.** Extent of use(s) completed **as authorized by the water right permit**:

Domestic (No. households) 1 Irrigation (No. acres) 1 Stockwater (No. and stock type) _____

Other _____

**4.** Total diversion rate or volume (storage only) for which proof is submitted .07 cfs OR _____ af

*If the total developed water use is 5 acres of irrigation or less, is stockwater storage of 14.6 acre-feet or less, or has a diversion rate of less than 0.24 cfs, attach a map of the place of use and point of diversion and photographs showing beneficial use.*

**5.** Describe the diversion and delivery system from the water source to the use (pump, lift, irrigation method, etc.)

1 HP JET PUMP, SANDPOINT WELL, TOTAL DEPTH FROM WATER TABLE TO GRADE IS ~35' (SEE AFFIDAVIT, ATTACHMENT 1). (CONTINUED, SEE PG. 2)

**6.** Permit condition compliance. Refer to the permit approval conditions and check all the items required, then check "Yes" or "No" to indicate whether the required items were established, submitted, and/or installed:

| Required? | Yes | No | (If "Yes", attach required data, evidence of compliance, or evidence of installation) |
|---|---|---|---|
| ☑ | ☑ | ☐ | Ground water level data, pumping information, or other diversion data |
| ☐ | ☐ | ☐ | Mitigation plan |
| ☐ | ☐ | ☐ | Lockable controlling works |
| ☐ | ☐ | ☐ | Measuring device |
| ☐ | ☐ | ☐ | Fish screen |
| ☐ | ☐ | ☐ | Other requirements of the water right permit _____ |
| | ☐ | ☐ | Reasonably Anticipated Future Needs ("RAFN") Municipal use |

If RAFN Municipal use, additional increment of beneficial use developed? ☐ Yes (attach CWRE report) ☐ No

**7.** Fee Enclosed $ 50.00 or ☐ CWRE field report attached or ☐ No fee required

*See fee schedule on page 3 of the instructions. Proof statements filed without an appropriate fee are incomplete.*

**8.** Person to contact to accompany a Department representative during the field examination of the water system:

Name: BEN DUNN Telephone No. (208) 636-7473 Email deb3414jd@yahoo.com

Mailing Address PO BOX 1 City COLBURN State ID Zip 83865

**The information given on this form is my true statement of the extent to which the above numbered permit has been developed and water has been diverted and applied to beneficial use. I understand that any undeveloped portion of the permit is relinquished to the State of Idaho.**

| Benny E. Dunn | BENNY E. DUNN | 20 Nov '23 |
|---|---|---|
| SIGNATURE OF PERMIT HOLDER* | PRINTED NAME AND TITLE | DATE |

*Attach power of attorney if completing on behalf of permit holder.

The distance from the pump to the house is approximately 185' with two hose bibs in the back yard (see photo, Attachment 2).

Pump is 1 hp jet pump with 1¼" suction and 1" discharge (see technical brochure, Attachment 3).

Pump and pressure tank were replaced in-kind in May, 2021 (see invoice, Attachment 4 and photo, Attachment 5). Pressure tank has an 80-gallon capacity. Irrigation is accomplished with oscillating sprinklers.

STATEMENT OF COMPLETION
98-8103

# GENERAL AFFIDAVIT

State of Idaho,

DESCRIPTION OF SANDPOINT WELL INSTALLED, 1994,

County of Bonner, City of Sandpoint

The following person came and appeared before me, the undersigned notary, the within named Robert H. Straley Jr., who is a resident of Bonner County, State of Idaho, currently residing at 31 Elmira Rd, Sandpoint ID 83864, and makes his statement and General Affidavit upon oath and affirmation of belief and personal knowledge that the following matters, facts and things set forth are true and correct to the best of his knowledge.

I, Robert H. Straley Jr. do hereby certify the following: Sometime about 1994 my family and I occupied the property now known as 339 Noogie Lane, Sandpoint, Idaho 83864, recorded with Bonner County as RP59N01W10, Lot 1, Lock Plat (Attachment 2). At that time a sand point water system was installed on the property in order to provide domestic water to a mobile home. The location of the well is approximately 182' north and 87' east of the southwest property marker, labeled "PROVOLT PLS 7879."

Initially, a hole was dug at this location using a backhoe. This hole was approximately 25' deep and 4' in diameter. Concrete rings were lowered into this hole, one atop the other. Then a small diameter drive point (believed to be no greater than 2") was driven into the ground approximately another 10' to reach the water table and supply water to the mobile home by way of a pump and pressure tank. Total depth of the well is approximately 35'.

DATED this 11 day of July, 2022

Robert H Straley Jr.
Signature of Affiant

SWORN to subscribed before me, this 11 day of July, 2022

Leah-Ann M Florence
NOTARY PUBLIC

My Commission Expires 09/24/2025

Leah-Ann M Florence
COMMISSION EXPIRES
NOTARY PUBLIC
COMM. NO. 20191009
STATE OF IDAHO

ATTACHMENT 1

ATTACHMENT 1

STATEMENT OF COMPLETION
98-8103

POINT OF DIVERSION

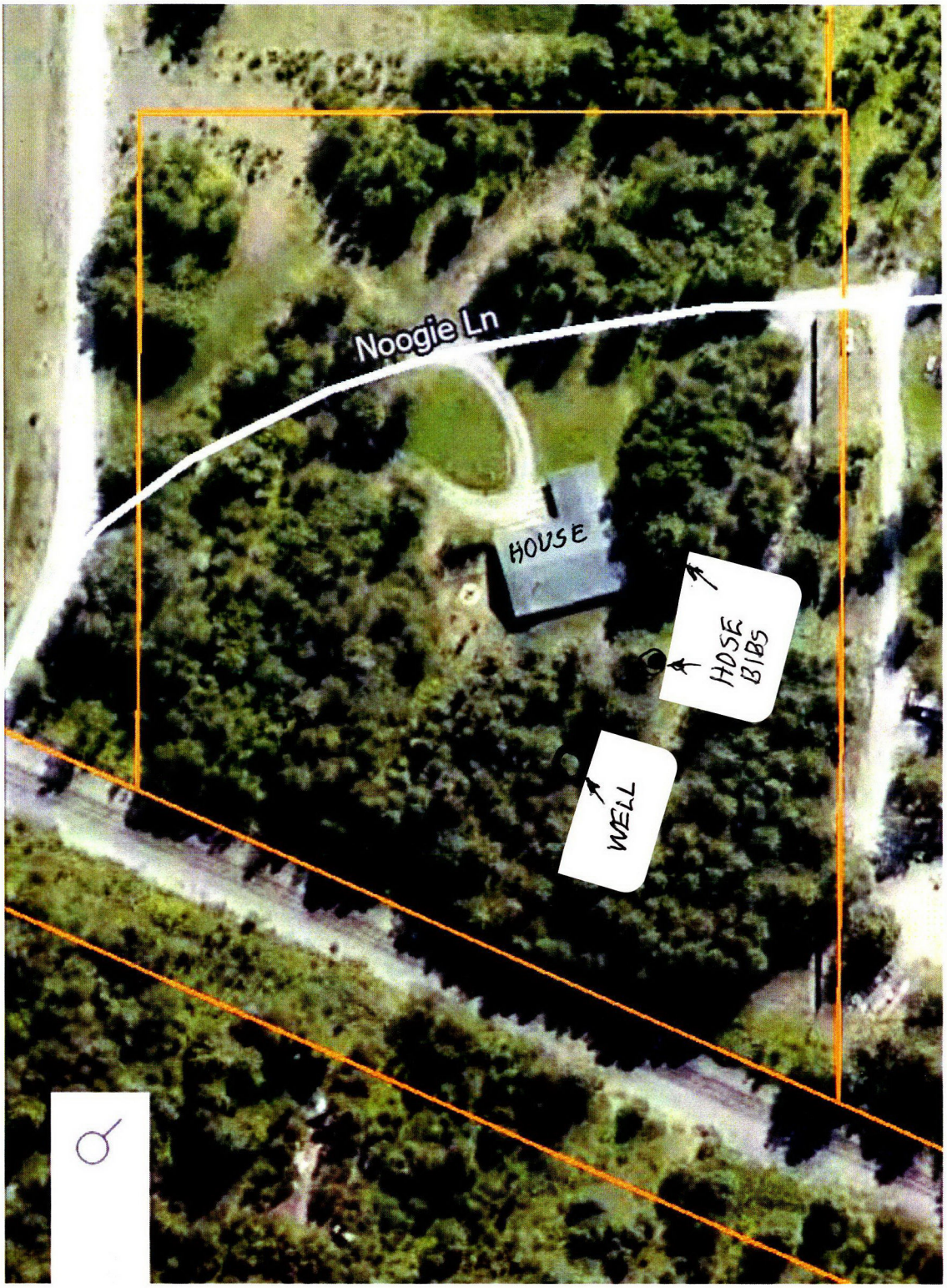


PC

ATTACHMENT 2

xylem
Let's Solve Water

ATTACHMENT TO
STATEMENT OF COMPLETION
98-8103

**TECHNICAL BROCHURE**
BJ+ R4

SPECS. FOR NEW PUMP
INSTALLED, 5/2021

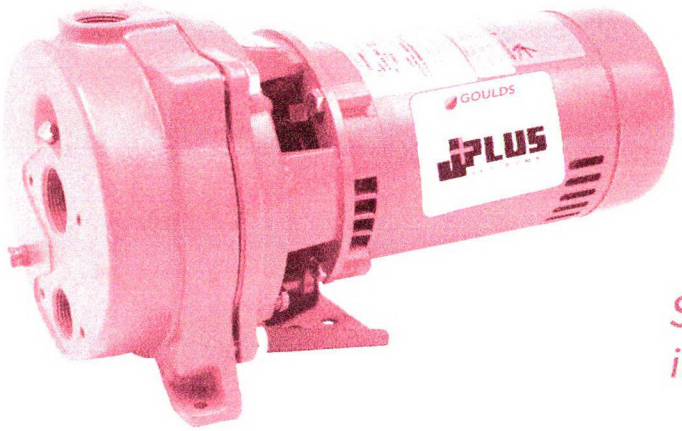


*NOW NSF LISTED!!*

*Still Built in the USA...*

DRINKING WATER
NSF/ANSI 61 & 372

---

# J+ J5, J7, J10 AND J15

CONVERTIBLE JET PUMPS ½, ¾, 1 AND 1½ HP - 60 HZ

---

GOULDS
a xylem brand

ATTACHMENT 3

## FEATURES

**Convertible:** May be used on shallow or deep well applications using appropriate Goulds Water Technology fittings.

**Serviceable:**

- Back pullout design for service without disturbing piping.
- Two compartment motor for access to wiring and replaceable components.
- Nozzle clean out plug in shallow well adapter.
- Corrosion resistant, plastic tubing and fittings are easily removed for cleaning. Premium O-ring design fittings need only be hand tight to seal.

**Impeller:** F.D.A. compliant, glass filled engineered composite. Corrosion and abrasion resistant.

**Diffuser (Guidevane):** Bolt down glass filled engineered composite diffuser has stainless wear ring for extended performance in abrasive conditions.

**Powered for Continuous Operation:** Pump ratings are within the motor manufacturer's recommended working limits. Can be operated continuously without damage.

**Corrosion Resistant:** Electro-coat paint is baked on.

**Protected Mechanical Seal:** Diaphragm retains water in the casing to ensure the mechanical seal can never run dry.

**Excellent Air Handling Ability:** After initial priming the pump has the ability to re-prime itself.

**NSF Listed:** The first NSF listed jet pumps in the industry. All jet pumps and shallow well components only, deep well components are not listed.

## AGENCY LISTINGS

**Canadian Standards Association**

DRINKING WATER NSF/ANSI 61 & 372

## MODEL INFORMATION

| CSA Listed Order No. | HP |
|---|---|
| J5 | ½ |
| J7 | ¾ |
| J10 | 1 |
| J15 | 1½ |

## APPLICATIONS

Specifically designed for:

- Homes
- Farms
- Cottages
- Booster service

## SPECIFICATIONS

**Pump:**

- Pipe connections: 1¼" NPT suction, 1" NPT discharge, 1" NPT drive (pressure)
- Pressure switch: AS4 preset at 30-50 PSI

**Motor:**

- NEMA standard
- 60 Hz, 3500 RPM, single phase
- ½ - 1½ HP, 115/230 V capacitor start
- Built-in overload with automatic reset
- Stainless steel shaft
- Rotation: clockwise when viewed from motor end
- UL778 listed

**Maximum temperature:** 140°F

## SYSTEM COMPONENTS

- Basic Pump Unit: Includes pump and motor, pressure gauge and bushing, pressure switch with tubing and fittings.

  NOTE: THE TUBING COMES CONNECTED FOR SHALLOW WELL USE. A DEEP WELL SET UP REQUIRES A JDW FITTINGS PACKAGE OR AN AV22 KIT.

  Both include additional fittings and a 24" tubing to connect to a pressure control valve.

## ADDITIONAL COMPONENTS REQUIRED

- Shallow Well Package: Includes shallow well adapter, nozzle, venturi (diffuser), gasket, bolts and pipe plugs OR
- Deep Well Package: Choose either a twin pipe or packer style.
  - Twin pipe includes jet body, nozzle, venturi (diffuser) and foot valve.
  - Packer includes packer body, nozzle, venturi (diffuser), and built-in check valve.

  NOTE: Packer systems also require a packer adapter on the wellhead.

Deep well systems require a pressure control valve.

NOTE: YOU MUST HAVE A JDW OR AV22 KIT TO MAKE THE PRESSURE SWITCH CONNECTION.

Pressure tank required on all systems.

## SHALLOW WELL PERFORMANCE RATINGS

| HP/Model | ½ HP - J5 | | | | | ½ HP - J5 | | | | | | ¾ HP - J7 | | | | | 1 HP - J10 | | | | | 1½ HP - J15 | | | | |
|---|---|---|---|---|---|---|---|---|---|---|---|---|---|---|---|---|---|---|---|---|---|---|---|---|---|---|
| Shallow Well Package | FH5 | | | | | FH5H (High Pressure Model) | | | | | | FH7 | | | | | FH10 | | | | | FH15 | | | | |
| Adapter | 4K62 | | | | | | | | | | | | | | | | | | | | | | | | | |
| Nozzle | AN017 | | | | | AN019 | | | | | | AN018 | | | | | AN018 | | | | | AN022 | | | | |
| Venturi | AD3731 | | | | | AD3528 | | | | | | AD3536 | | | | | AD3538 | | | | | AD3542 | | | | |
| | Discharge Pressure - PSI | | | | | Discharge Pressure - PSI | | | | | | Discharge Pressure - PSI | | | | | Discharge Pressure - PSI | | | | | Discharge Pressure - PSI | | | | |
| Total Suction Lift (feet) | 20 | 30 | 40 | 50 | Max. Shut off (PSI) | 20 | 30 | 40 | 50 | 60 | Max. Shut off (PSI) | 30 | 40 | 50 | 60 | Max. Shut off (PSI) | 30 | 40 | 50 | 60 | Max. Shut off (PSI) | 30 | 40 | 50 | 60 | Max. Shut off (PSI) |
| | Gallons per minute | | | | | Gallons per minute | | | | | | Gallons per minute | | | | | Gallons per minute | | | | | Gallons per minute | | | | |
| 5 | 17.5 | 16.5 | 10.2 | 5.0 | 63 | 11.5 | 11.3 | 11.0 | 7.7 | 4.8 | 83 | 21.3 | 18.3 | 12.5 | 6.6 | 70 | 24.8 | 24.4 | 16.6 | 9.9 | 74 | 26.6 | 26.3 | 25.0 | 15.6 | 80 |
| 10 | 15.7 | 14.4 | 9.2 | 4.3 | 61 | 10.3 | 10.0 | 9.6 | 7.0 | 4.2 | 81 | 18.8 | 17.3 | 11.3 | 5.0 | 68 | 22.9 | 22.2 | 15.8 | 8.6 | 72 | 24.7 | 24.3 | 22.6 | 13.9 | 77 |
| 15 | 13.7 | 12.5 | 8.0 | 3.6 | 59 | 8.8 | 8.6 | 8.3 | 6.3 | 3.7 | 79 | 16.4 | 15.5 | 9.6 | 3.7 | 66 | 19.8 | 19.5 | 13.8 | 6.9 | 70 | 21.6 | 21.5 | 20.4 | 12.9 | 75 |
| 20 | 11.5 | 10.4 | 7.1 | 2.3 | 57 | 7.0 | 7.0 | 6.8 | 5.8 | 3.2 | 76 | 13.6 | 13.2 | 8.3 | 2.0 | 63 | 16.6 | 16.6 | 12.2 | 5.6 | 67 | 18.1 | 18.0 | 17.6 | 12.0 | 73 |
| 25 | 8.7 | 8.6 | 6.2 | 1.3 | 54 | 5.3 | 5.2 | 5.2 | 5.0 | 2.8 | 73 | 10.0 | 9.9 | 6.4 | 1.0 | 59 | 12.5 | 12.4 | 10.4 | 3.6 | 65 | 14.0 | 14.0 | 14.0 | 10.1 | 71 |

## TWIN PIPE PERFORMANCE RATINGS

| HP/Model | | ½ HP - J5 | | | | ¾ HP - J7 | | | | | 1 HP - J10 | | | | | 1½ HP - J15 | |
|---|---|---|---|---|---|---|---|---|---|---|---|---|---|---|---|---|---|
| Well Casing min. I.D. | | 4 | | | 4½ | 4 | | | 4½ | | 4 | | | 4½ | | 4½ | |
| Pressure | Pipe Size (in.) | 1 | | | 1¼ | 1 | | | 1¼ | | 1 | | | 1¼ | | 1¼ | |
| Suction | Pipe Size (in.) | 1¼ | | | 1½ | 1¼ | | | 1½ | | 1¼ | | | 1½ | | 1½ | |
| Jet Assembly Package ① | | FT4B-13 | FT4B-31 | FT4B-08 | FT5B-14 | FT4B-14 | FT4B-34 | FT4B-18 | FT5B-47 | FT5B-48 | FT4B-44 | FT4B-43 | FT4B-18 | FT5B-49 | FT5B-11 | FT5B-12 | FT5B-11 |
| Jet Body (only) | | AT4B | | | AT5B | AT4B | | | AT5B | | AT4B | | | AT5B | | AT5B | |
| Nozzle | | AN017 | AN016 | AN015 | AN018 | AN017 | AN016 | AN016 | AN018 | AN017 | AN017 | AN017 | AN016 | AN019 | AN018 | AN019 | AN018 |
| Venturi | | AD726 | AD723 | AD720 | AD724 | AD729 | AD725 | AD722 | AD730 | AD725 | AD730 | AD727 | AD722 | AD732 | AD727 | AD734 | AD727 |
| Control Valve Setting (PSI) ② | | 30 | 30 | 30 | 30 | 28 | 29 | 30 | 28 | 30 | 31 | 33 | 35 | 30 | 32 | 35 | 40 |
| | Feet | Gallons Per Minute (GPM) 30-50 PSI Pressure Switch Setting | | | | | | | | | | | | | | | |
| Depth to Jet Assembly (based on submergence of 5 feet) | 30 | 13.0 | 11.0 | | | 15.8 | | | 16.6 | | 17.0 | | | 19.3 | | 21.2 | |
| | 40 | 11.8 | 9.0 | | | 15.7 | | | 16.0 | | 16.6 | | | 18.0 | | 20.0 | |
| | 50 | | 7.6 | | 6.9 | 13.2 | | | 15.0 | | 14.4 | | | 16.0 | | 16.1 | |
| | 60 | | 7.0 | 5.2 | 6.4 | 10.2 | | | 13.0 | | 11.5 | 11.2 | | 14.3 | | 15.0 | |
| | 70 | | | 4.7 | 5.6 | | 8.2 | | 11.0 | 10.0 | | 9.3 | | 12.6 | | 14.0 | 11.2 |
| | 80 | | | 3.8 | 4.8 | | 6.5 | | | 8.6 | | 7.3 | 6.2 | 10.0 | 10.0 | | 10.6 |
| | 90 | | | 3.1 | 4.1 | | 5.0 | 5.0 | | 7.3 | | | 6.1 | | 8.7 | | 9.0 |
| | 100 | | | | | | | 4.4 | | 6.0 | | | 5.4 | | 7.0 | | 7.6 |
| | 110 | | | | | | | 3.5 | | 5.0 | | | 4.5 | | 5.7 | | 6.2 |
| | 120 | | | | | | | | | | | | | | 4.5 | | 5.2 |
| | 130 | | | | | | | | | | | | | | | | 4.0 |
| | 140 | | | | | | | | | | | | | | | | 2.8 |
| | 150 | | | | | | | | | | | | | | | | 1.5 |
| | 160 | | | | | | | | | | | | | | | | |
| | 170 | | | | | | | | | | | | | | | | |

NOTE: An offset of 50 feet will result in a decrease of about 25% from ratings as shown.

① Jet assembly package includes jet body (AT4), venturi, nozzle and foot valve.

② Deep well jet pumps require a pressure control device on the discharge to provide back pressure to the jet assembly. Failure to control the amount of discharge by adjusting the back pressure (pressure control valve setting) will cause the pump to lose prime. On pumps with low control valve settings, up to 40 psi, a simple ball valve or AV15 will work. On systems with control valve settings of 40 - 80 psi an AV22, AV22KIT or AV21 is required. They measure the pressure on the outbound side so that the high pressure does not open the 30-50 psi switch and turn the pump off.

## PACKER SYSTEM PERFORMANCE RATINGS

| HP/Model | | ½ HP - J5 | | | | | ¾ HP - J7 | | | | 1 HP - J10 | | | | 1½ HP - J15 | | | |
|---|---|---|---|---|---|---|---|---|---|---|---|---|---|---|---|---|---|---|
| Well Casing | | 2 | | | 3 | | 2 | | 3 | | 2 | | 3 | | 3 | | | |
| Suction Pipe Size (in.) | | 1¼ | | | 1½ | | 1¼ | | 1½ | | 1¼ | | 1½ | | 1½ | | | |
| Jet Assembly Package ① | | FP2-13 | FP2-31 | FP2-08 | FP3-36 | FP3-24 | FP2-40 | FP2-47 | FP3-53 | FP3-54 | FP2-48 | FP2-43 | FP3-55 | FP3-14 | FP3-16 | FP3-18 | FP3-21 | FP3-24 |
| Jet Body (only) | | AP2 | | | AP3 | | AP2 | | AP3 | | AP2 | | AP3 | | AP3 | | | |
| Nozzle | | AN017 | AN016 | AN015 | AN021 | AN018 | AN015 | AN015 | AN018 | AN017 | AN016 | AN016 | AN019 | AN018 | AN019 | AN021 | AN023 | AN018 |
| Venturi | | AD726 | AD723 | AD720 | AD730 | AD724 | AD727 | AD723 | AD730 | AD725 | AD729 | AD725 | AD732 | AD727 | AD735 | AD723 | AD731 | AD724 |
| Control Valve Setting (PSI) ② | | 30 | 30 | 30 | 30 | 30 | 30 | 32 | 27 | 30 | 35 | 36 | 28 | 32 | 34 | 34 | 34 | 39 |
| | Feet | Gallons Per Minute (GPM) 30-50 PSI Pressure Switch Setting | | | | | | | | | | | | | | | | |
| Depth to Jet Assembly (based on submergence of 5 feet) | 30 | 11.9 | 9.5 | | 13.1 | | 13.8 | | 16.8 | | 16.7 | | 19.3 | | 24.4 | | | |
| | 40 | 10.6 | 7.9 | | 12.6 | | 13.5 | | 16.8 | | 14.6 | | 19.3 | | 23.1 | | | |
| | 50 | | 7.6 | | 10.7 | 6.9 | 11.5 | | 15.3 | | 13.5 | | 18.0 | | 20.2 | | | |
| | 60 | | 6.7 | 4.8 | 8.8 | 6.5 | 9.0 | 7.8 | 13.5 | | 11.0 | 9.2 | 15.3 | | 16.9 | 15.0 | | |
| | 70 | | | 4.3 | 7.3 | 5.6 | | 7.1 | 11.5 | 9.8 | | 9.0 | 12.7 | | | 14.4 | | |
| | 80 | | | 3.5 | | 4.8 | | 5.1 | | 8.6 | | 7.3 | 10.2 | 10.3 | | 12.9 | | |
| | 90 | | | | | | | 4.3 | | 7.3 | | 5.6 | | 8.8 | | 10.9 | 10.3 | |
| | 100 | | | | | | | | | 6.2 | | 4.2 | | 7.2 | | | 9.6 | 7.3 |
| | 110 | | | | | | | | | 5.0 | | | | 5.8 | | | 8.2 | 6.5 |
| | 120 | | | | | | | | | | | | | 4.5 | | | 6.9 | 5.8 |
| | 130 | | | | | | | | | | | | | | | | 5.8 | 5.0 |
| | 140 | | | | | | | | | | | | | | | | 4.7 | 4.5 |
| | 150 | | | | | | | | | | | | | | | | 3.4 | 4.0 |
| | 160 | | | | | | | | | | | | | | | | | 3.3 |
| | 170 | | | | | | | | | | | | | | | | | 2.8 |

NOTE: An offset of 50 feet will result in a decrease of about 25% from ratings as shown. Special turned (diameter) couplings are required on 2" packer systems, order no. 64655 in Jet and Sub price book.

① Jet Assembly Package includes jet body, AP2 or AP3; built-in check valve, nozzle and venturi.

② Same as above

## COMPONENTS

| Item No. | Description |
|---|---|
| 1 | Mechanical seal |
| 2 | Pressure switch |
| 3 | Casing |
| 4 | Impeller |
| 5 | Diffuser (Guidevane) |
| 6 | Diaphragm |
| 7 | Stainless steel shaft |
| 8 | Nozzle clean-out plug |
| 9 | Motor adapter |
| 10 | Motor |
| 11 | Nozzle |
| 12 | Venturi |

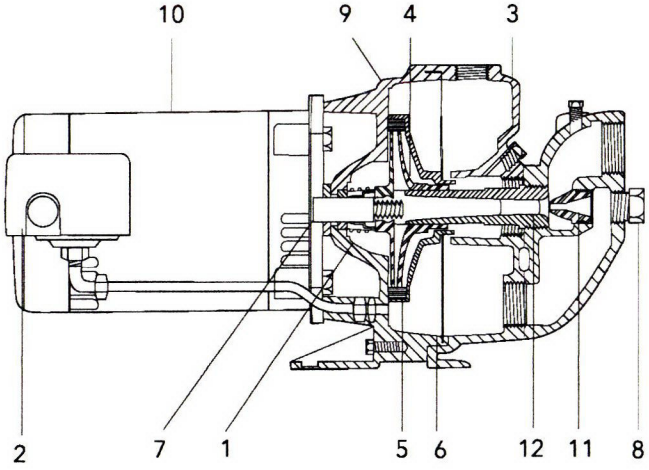


Shallow Well Model

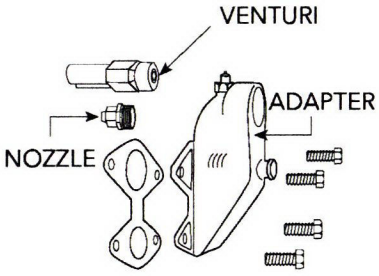


Shallow Well Package

## DIMENSIONS AND WEIGHTS

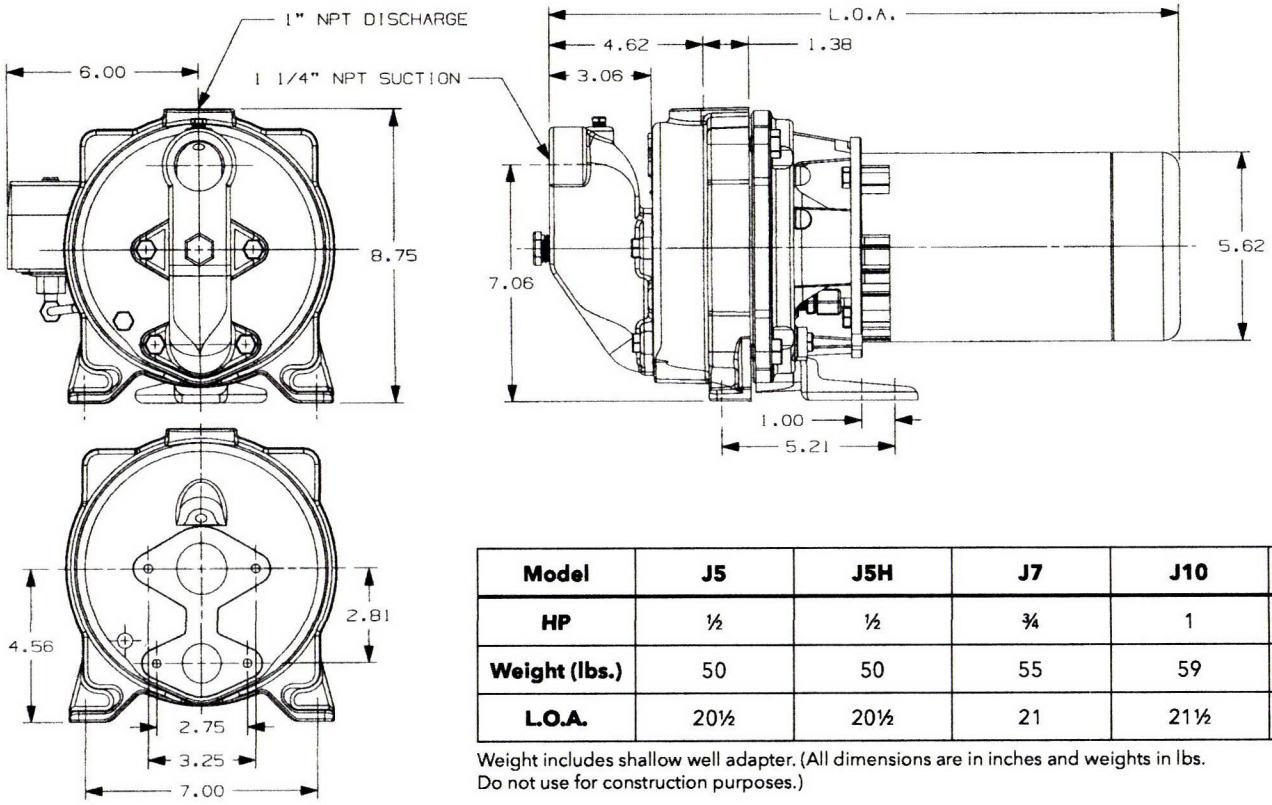


| Model | J5 | J5H | J7 | J10 | J15 |
|---|---|---|---|---|---|
| HP | ½ | ½ | ¾ | 1 | 1½ |
| Weight (lbs.) | 50 | 50 | 55 | 59 | 68 |
| L.O.A. | 20½ | 20½ | 21 | 21½ | 24 |

Weight includes shallow well adapter. (All dimensions are in inches and weights in lbs. Do not use for construction purposes.)

xylem
Let's Solve Water


Xylem Inc.
2881 East Bayard Street Ext., Suite A
Seneca Falls, NY 13148
Phone: (866) 325-4210 • Fax: (888) 322-5877
www.xylem.com/goulds



Xylem is a registered trademark of Xylem, Inc., or one of it's subsidiaries. Goulds is a registered trademark of Goulds Pumps, Inc. and is used under license.
© 2022 Xylem Inc. BJ+ R4 May 2022

**Amped Pump & Controls LLC**
76 Seneacquoteen Dr
Priest River, ID 83856 US
ampedcontrols@gmail.com

ATTACHMENT TO
STATEMENT OF COMPLETION
98-8103

AMPED
PUMP & CONTROLS LLC

INVOICE FOR NEW PUMP
INSTALLED, 5/2021.

INVOICE

Ben Dunn
339 Noogie Ln
Sandpoint, ID 83864

6956
05/26/2021
Due on receipt
05/26/2021

| | | | | | |
|---|---|---|---|---|---|
| | Galv Pipe | | 1 | 55.00 | 55.00 |
| | Misc Galv Fittings | | 1 | 125.00 | 125.00 |
| | Misc Elect. | | 1 | 75.00 | 75.00 |
| | Fuse Disconnect | | 1 | 135.00 | 135.00 |
| * | Pressure Tank | 80 Gal | 1 | 655.00 | 655.00 |
| | Concrete Base/Cone/Riser/Lid | 5' | 1 | 1,500.00 | 1,500.00 |
| | Well Lid | | 1 | 124.00 | 124.00 |
| | Step Rungs | | 1 | 129.00 | 129.00 |
| | Mark Up | | 1 | 167.88 | 167.88 |
| | Labor | | 1 | 2,500.00 | 2,500.00 |
| | Excavating/Fill | | 1 | 850.00 | 850.00 |
| | Deposit | Paid on 5/3/2021 | 1 | -3,157.94 | -3,157.94 |
| * | 1 HP Deep Well Pump | | 1 | 1,200.00 | 1,200.00 |
| | Fuse Disconnect | | 1 | 125.00 | 125.00 |
| | Mark Up | | 1 | 92.75 | 92.75 |
| | Labor | Add on | 4 | 145.00 | 580.00 |
| | Credit card Fee | | 1 | -255.23 | -255.23 |

4,900.46

**$0.00**

* ORIGINAL PUMP INSTALLED IN 1994 WAS REPLACED IN-KIND THIS DATE. THE PRESSURE TANK WAS ALSO REPLACED.

ATTACHMENT 4

STATEMENT OF COMPLETION
98-8103
LOOKING DOWN INTO WELL
ATTACHMENT 5

**State of Idaho**
**Department of Water Resources**

# Permit to Appropriate Water

**No. 98-8103**

**Priority**: October 24, 2022 **Maximum Diversion Rate:** 0.07 CFS

This is to certify that

BEN AND PAULA DUNN LIVING TRUST PO BOX 1 COLBURN ID 83865-0001

has applied for a permit to appropriate water from:

**Source :** GROUND WATER

and a permit is APPROVED for development of water as follows:

| Beneficial Use | Period of Use | Rate of Diversion |
|---|---|---|
| IRRIGATION | 04/01 to 10/31 | 0.03 CFS |
| DOMESTIC | 01/01 to 12/31 | 0.04 CFS |

**Location of Point(s) of Diversion**
GROUND WATER NW¼ NW¼, Sec. 10, Twp 59N, Rge 01W, B.M. BONNER County

**Place of Use:** IRRIGATION

| Twp | Rng | Sec | NE | | | | NW | | | | SW | | | | SE | | | | Totals |
|---|---|---|---|---|---|---|---|---|---|---|---|---|---|---|---|---|---|---|---|
| | | | NE | NW | SW | SE | NE | NW | SW | SE | NE | NW | SW | SE | NE | NW | SW | SE | |
| 59N | 01W | 10 | | | | | 0.5 | 0.5 | | | | | | | | | | | 1.0 |

Total Acres: 1.0

**Place of Use:** DOMESTIC

| Twp | Rng | Sec | NE | | | | NW | | | | SW | | | | SE | | | | Totals |
|---|---|---|---|---|---|---|---|---|---|---|---|---|---|---|---|---|---|---|---|
| | | | NE | NW | SW | SE | NE | NW | SW | SE | NE | NW | SW | SE | NE | NW | SW | SE | |
| 59N | 01W | 10 | | | | | X | X | | | | | | | | | | | |

**Conditions of Approval**

1. Proof of application of water to beneficial use shall be submitted on or before **March 01, 2024.**
2. Subject to all prior water rights.
3. Right holder shall comply with the drilling permit requirements of Idaho Code § 42-235 and applicable Well Construction Rules of the Department.
4. Domestic use is for 1 home. Irrigation of lawn, garden and landscaping associated with the home is authorized under the irrigation component of this right.
5. This right when combined with all other rights shall provide no more than 0.03 cfs per acre nor more than 3.0 afa per acre at the field headgate for irrigation of the place of use.
6. This right does not grant any right-of-way or easement across the land of another.

This permit is issued pursuant to the provisions of Idaho Code § 42-204.

Signed this 22 day of February, 2023.

LUKE BATES
Interim Water Rights Supervisor

SCANNED
MAR 0 1 2023

**State of Idaho**
**Department of Water Resources**

# Attachment to Permit to Appropriate Water

**98-8103**

This map depicts the IRRIGATION and DOMESTIC place of use boundary for this water right at the time of this approval and is attached to the approval document solely for illustrative purposes.

Place Of Use Boundary
PLS Sections
Quarter Quarters
Point of Diversion
Taxlots

0 0.0275 0.055 0.11 Miles

N

Tax parcel information provided by Bonner County.

SCANNED
MAR 0 1 2023

RECEIVED
OCT 2 2022

RECEIVED
FORM 202 Rev. 09/16
JUL 14 2022
IDWR/NORTH

Print Single Sided Only

87136

STATE OF IDAHO
DEPARTMENT OF WATER RESOURCES

Ident. No. 98-8103

IDWR / NORTH RECEIVED

# APPLICATION FOR PERMIT

OCT 24 2022

**To appropriate the public waters of the State of Idaho**

IDWR / NORTH

1. Name of applicant(s) BEN AND PAULA DUNN LIVING TRUST Phone (208) 263-7473
   Name connector (check one): ☐ and ☐ or ☐ and/or
   Mailing address PO BOX 1 City COLBURN
   State ID ZIP 83864 Email deb3414jd@yahoo.com
2. Name of representative, if any _____ Phone _____
   Mailing address _____ City _____
   State _____ ZIP _____ Email _____
   a. ☐ Send all correspondence for this application to the representative and not to the applicant OR
      ☐ Send original correspondence to the applicant and copies to the representative.
   b. ☐ The representative may submit information for the applicant but is not authorized to sign for the applicant OR
      ☐ The representative is authorized to sign for the applicant. Attach a Power of Attorney or other documentation.
3. Source of water supply GROUNDWATER which is a tributary of _____
4. Location of point(s) of diversion:

| Twp | Rge | Sec | Govt Lot | ¼ | ¼ | ¼ | County | Source | Local name or tag # |
|---|---|---|---|---|---|---|---|---|---|
| 59N | 01W | 10 | | | NW | NW | BONNER | GROUNDWATER | |
| | | | | | | | | | |
| | | | | | | | | | |
| | | | | | | | | | |

5. Water will be used for the following purposes:
   Amount 0.04 CFS for DOMESTIC purposes from 01-01 to 12-31 (both dates inclusive)
   (cfs or acre-feet per year) 10/20/22
   Amount ~~0.02 CFS~~ BD for ~~STOCKWATER~~ BD 10/20/22 purposes from ~~01-01~~ 10/20/22 BD to ~~12-31~~ BD 10/20/22 (both dates inclusive)
   (cfs or acre-feet per year)
   Amount .03 CFS for IRRIGATION purposes from 04-01 to 10-31 (both dates inclusive)
   (cfs or acre-feet per year)
   Amount _____ for _____ purposes from _____ to _____ (both dates inclusive)
   (cfs or acre-feet per year)
6. Total quantity to be appropriated is (a) .07 cubic feet per second (cfs) and/or (b) _____ acre-feet per year (af).
7. Proposed diverting works:
   a. Describe type and size of devices used to divert water from the source. SAND POINT WELL FOR ONE HOME AND SMALL IRRIGATION
   b. Height of storage dam _____ feet; active reservoir capacity _____ acre-feet; total reservoir capacity _____ acre-feet. If the reservoir will be filled more than once each year, describe the refill plan in item 12. For dams 10 feet or more in height AND having a storage capacity of 50 acre-feet or more, submit a separate Application for Construction or Enlargement of a New or Existing Dam. Application required? ☐ Yes ☐ No
   c. Proposed well diameter is _____ inches; proposed depth of well is _____ feet.
   d. Is ground water with a temperature of greater than 85°F being sought? ☐ Yes ☐ No
   e. If well is already drilled, when? 1994; drilling firm PROPERTY OWNER (ATTACHMENT 1) well was drilled for (well owner) _____; Drilling Permit No. _____.

**For Department Use**

Received by _____ Date _____ Time _____ Preliminary check by _____
Fee $ 1000 Receipted by NS Receipt No. N040537 Date 7-14-22

SCANNED
NOV 08 2022

8. Description of proposed uses (if irrigation only, go to item 9):
   a. Hydropower; show total feet of head and proposed capacity in kW. _____
   b. Stockwatering; list number and kind of livestock. ~~50 HEAD MIXED STOCK~~
   c. Municipal; must complete and attach the Municipal Water Right Application Checklist.
   d. Domestic; show number of households ~~1 (INCLUDES 0.5 ACRES LAWN~~ / GARDEN IRRIGATION) SEE LN. 9
   e. Other; describe fully. _____

9. Description of place of use:
   a. If water is for irrigation, indicate acreage in each subdivision in the tabulation below.
   b. If water is used for other purposes, place a symbol of the use (example: D for Domestic) in the corresponding place of use below. See instructions for standard symbols.

| TWP | RGE | SEC | NE | | | | NW | | | | SW | | | | SE | | | | TOTALS |
|---|---|---|---|---|---|---|---|---|---|---|---|---|---|---|---|---|---|---|---|
| | | | NE | NW | SW | SE | NE | NW | SW | SE | NE | NW | SW | SE | NE | NW | SW | SE | |
| 59N | 01W | 10 | | | | | D | D | | | | | | | | | | | |
| 59N | 01W | 10 | | | | | ~~.05~~ | ~~.05~~ | | | | | | | | | | | |
| | | | | | | | 0.5 | 0.5 | | | | | | | | | | | |
| | | | | | | | ~~0.5~~ | 10/20/22 | | | | | | | | | | | |
| | | | | | | | | | | | | | | | | | | | |

Total number of acres to be irrigated: 1.0

10. Describe any other water rights used for the same purposes as described above. Include water delivered by a municipality, canal company, or irrigation district. If this application is for domestic purposes, do you intend to use this water, water from another source, or both, to irrigate your lawn, garden, and/or landscaping? _____

11. a. Who owns the property at the point of diversion? APPLICANT
    b. Who owns the land to be irrigated or place of use? APPLICANT
    c. If the property is owned by a person other than the applicant, describe the arrangement enabling the applicant to make this filing: _____

12. Describe your proposal in narrative form and provide additional explanation for any of the items above. Attach additional pages if necessary. PHYSICAL ADDRESS 339 NOOGIE LN. ELLIS RIDGE REPLAT LOCK PLAT SUBDIVISION LOT 1. (ATTACHMENT 2)

13. Time required for completion of works and application of water to proposed beneficial use is 1 years (minimum 1 year).

14. **MAP OF PROPOSED PROJECT REQUIRED** - Attach an 8½" x 11" map or maps clearly identifying the proposed point of diversion, place of use, section #, township & range. The map scale shall not be less than two (2) inches equal to one (1) mile.

**The information contained in this application is true to the best of my knowledge. I understand that any willful misrepresentations made in this application may result in rejection of the application or cancellation of an approval.**

Benny E. Dunn
Signature of Applicant
BENNY E. DUNN
Print Name (and title, if applicable)

Paula Dunn
Signature of Applicant
PAULA DUNN
Print Name (and title, if applicable)

(SEE ATTACHMENT 3, TRUST)

Benny E. Dunn 10/20/22
Application for Permit

Paula Dunn 10/20/22

**Print Single Sided Only**



SCANNED NOV 0 8 2022

State of Idaho
Department of Water Resources

# Application For Permit

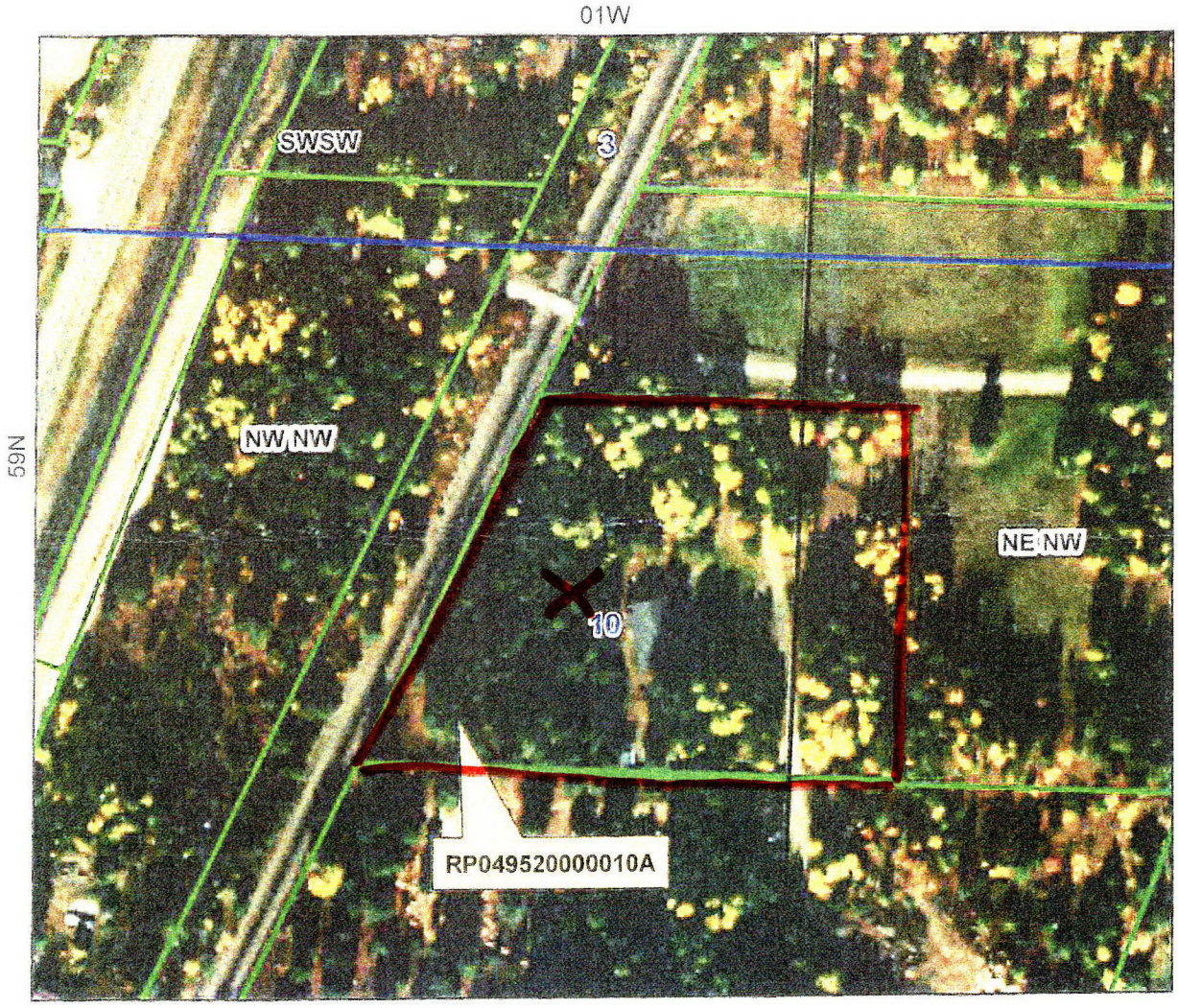


Place Of Use Boundary
PLS Sections
Quarter Quarters
~~Point of Diversion~~
Taxlots

0 0.025 0.05 0.1 Miles

X = Point of ~~Div~~ Diversion (well)

▭ = Place of use

N

Tax parcel information provided by Bonner County

SCANNED
NOV 08 2022

990815

BK 17 Pg 41

APPROX. LOCATION OF WELL

# REPLAT OF LOT 1, LOCK PLAT & LOT 1, ELLIS RIDGE

A PORTION OF THE NORTH HALF OF THE NORTHWEST QUARTER OF SECTION 10, TOWNSHIP 59 NORTH, RANGE 1 WEST, BOISE MERIDIAN, BONNER COUNTY, IDAHO

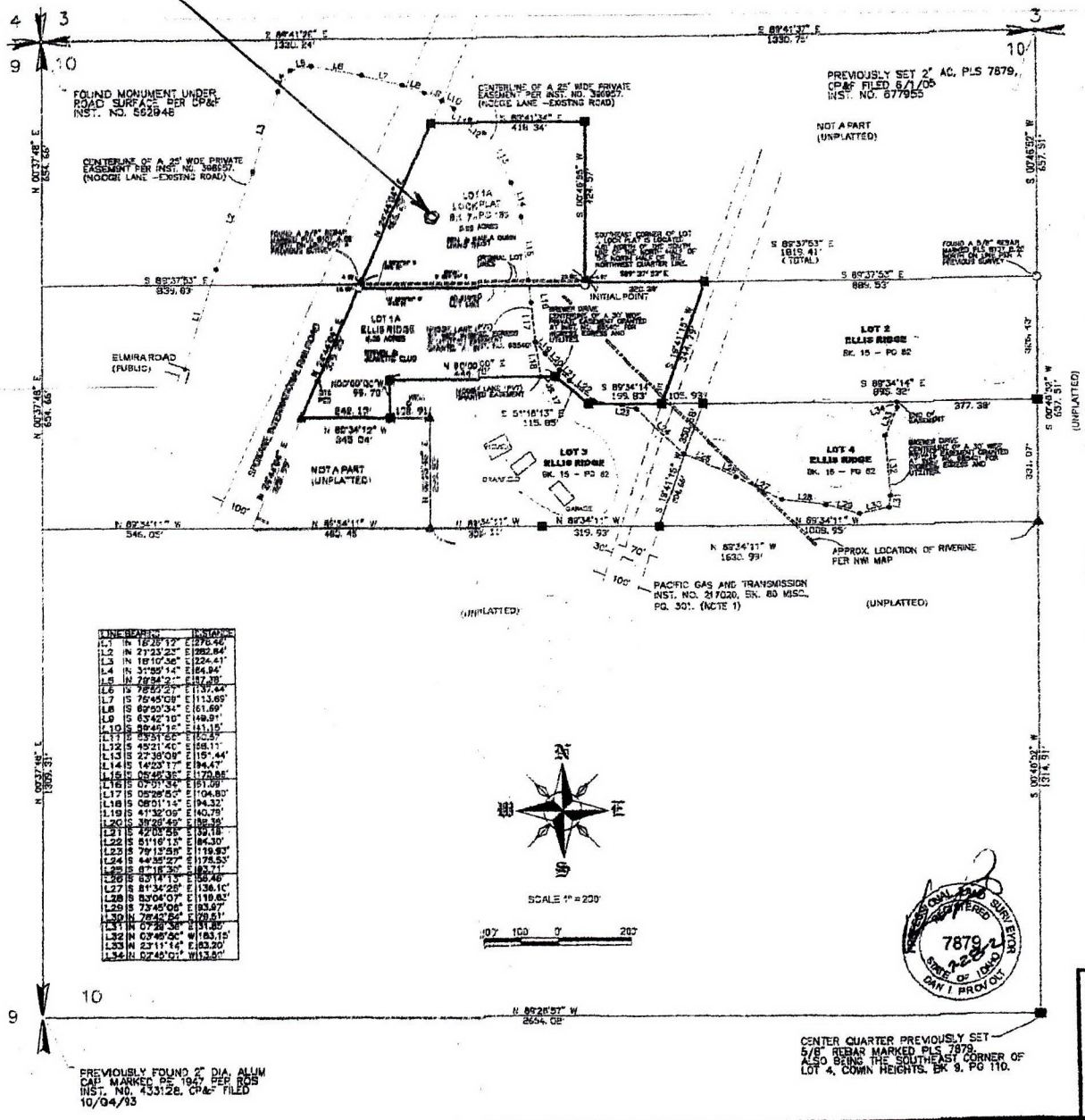


| LINE | BEARING | DISTANCE |
|---|---|---|
| L1 | N 18°28'12" E | 276.46' |
| L2 | N 21°23'22" E | 282.84' |
| L3 | N 18°10'38" E | 224.41' |
| L4 | N 31°55'14" E | 64.94' |
| L5 | N 79°34'2" E | 37.28' |
| L6 | N 78°50'21" E | 137.44' |
| L7 | S 75°45'09" E | 113.69' |
| L8 | S 62°50'34" E | 61.69' |
| L9 | S 63°42'10" E | 149.91' |
| L10 | S 88°46'16" E | 41.15' |
| L11 | S 53°51'55" E | 10.53' |
| L12 | S 45°21'40" E | 58.11' |
| L13 | S 27°38'09" E | 15.44' |
| L14 | S 14°23'17" E | 94.47' |
| L15 | S 05°46'38" E | 170.88' |
| L16 | S 07°01'32" E | 61.09' |
| L17 | S 05°28'50" E | 104.80' |
| L18 | S 08°01'14" E | 94.32' |
| L19 | S 41°32'09" E | 140.79' |
| L20 | S 38°28'46" E | 59.36' |
| L21 | S 42°05'55" E | 39.18' |
| L22 | S 81°16'13" E | 84.30' |
| L23 | S 79°13'58" E | 119.93' |
| L24 | S 44°36'27" E | 178.53' |
| L25 | S 87°16'30" E | 83.71' |
| L26 | S 63°14'13" E | 58.46' |
| L27 | S 81°34'25" E | 136.10' |
| L28 | S 83°04'07" E | 119.62' |
| L29 | S 73°45'06" E | 93.97' |
| L30 | N 78°42'04" E | 78.51' |
| L31 | N 07°28'38" E | 31.85' |
| L32 | N 03°46'56" W | 183.15' |
| L33 | N 23°11'14" E | 83.20' |
| L34 | N 02°46'01" W | 13.80' |

## BASIS OF BEARING

BASIS OF BEARING IS SOUTH 89 DEGREES 41' 37" EAST ALONG THE NORTH LINE OF SECTION 10 AS SHOWN HEREON.

## SURVEYOR'S NOTE

THIS SURVEY WAS PERFORMED USING REAL TIME KINEMATIC (RTK) GLOBAL POSITIONING SYSTEM (GPS) EQUIPMENT. THE LINEAR ERROR OF CLOSURE MEETS OR EXCEEDS REQUIREMENTS OF THE STATE OF IDAHO.

## SURVEY REFERENCES

1. LOCK PLAT, BOOK 7 OF PLATS, PAGE 136, RECORDS OF BONNER COUNTY, IDAHO.
2. RECORD OF SURVEY INSTRUMENT NO. 675311, PLS 7879
3. THE PLAT OF COWIN HEIGHTS, BOOK 9 OF PLATS, PAGE 110, RECORDS OF BONNER COUNTY, ID.
4. RECORD OF SURVEY INSTRUMENT NO. 913566, PLS 14879
5. RECORD OF SURVEY INSTRUMENT NO. 433128, PE/PLS 1947
6. ELLIS RIDGE, BOOK 15 OF PLATS, PAGE 62, RECORDS OF BONNER COUNTY, IDAHO.

## PURPOSE OF SURVEY-NARRATIVE

THE PURPOSE OF THIS SURVEY IS TO SHOW A BOUNDARY LINE ADJUSTMENT TO THE SOUTHERLY LINE OF LOCK PLAT LOT 1 AND THE NORTHERLY LINE OF ELLIS RIDGE LOT 1 ALONG WITH AN UNPLATTED STRIP THAT LIES BETWEEN THE TWO MENTIONED LOTS. SAID STRIP WAS DEEDED FROM OYLER TO DUNN ALONG WITH A 10.00 FEET WIDE STRIP DEEDED FROM ELLIS TO DUNN. THIS REPLAT COMBINES THE DUNN PROPERTIES AND REMOVES THE 10.00 FEET STRIP FROM THE ELLIS PLAT.

## LEGEND

- ○ SET 5/8" X 24" REBAR WITH PLASTIC CAP, PLS 7879, UNLESS OTHERWISE NOTED
- ■ PREVIOUSLY SET 5/8" REBAR WITH PLASTIC CAP, PLS 7879, UNLESS OTHERWISE NOTED
- ▲ FOUND 5/8" REBAR PLS 6107
- • CALCULATED POINT – NOT SET

## NOTES – SUBJECT TO:

1) AN EASEMENT FOR PACIFIC GAS TRANSMISSION LINE RECORDED DECEMBER 2, 1959, INSTRUMENT NO. 734436. NOTICE OF LOCATION RECORDED MARCH 9, 1962, INST. NO. 84312, NOTICE OF LOCATION RECORDED AUGUST 25, 1978, INST. NO. 206946, NOTICE OF LOCATION RECORDED JULY 25, 1979, INST. NO. 217020.
2) AN EASEMENT FOR A CROSSING LICENSE, RECORDED SEPTEMBER 22, 1981, INST. NO. 247273.
3) AN EASEMENT FOR INGRESS, EGRESS AND UTILITIES RECORDED APRIL 4, 1988, INST. NO. 347159.
4) AN EASEMENT AGREEMENT RECORDED OCTOBER 22, 1991, INST. NO. 396957.
5) AN EASEMENT TO NORTHERN LIGHTS, INC. RECORDED OCTOBER 28, 1992, INST. NO. 414567.
6) SUBJECT TO CONDITIONS AND RESTRICTIONS FOR THE ACCESS TO THE PROPERTY FOR THE BURLINGTON NORTHERN SANTA FE/SPOKANE INTERNATIONAL RAILROAD RAILWAY.
7) DEED OF TRUST DATED NOVEMBER 22, 2016, RECORDED NOVEMBER 30, 2016, INST. NO. 898675.
8) DEED OF TRUST DATED JUNE 11, 2018, RECORDED JUNE 15, 2018, INST. NO. 923196.
9) EASEMENTS FOR INGRESS, EGRESS AND UTILITIES RECORDED SEPTEMBER 15, 2020, INST. NO. 965401.
10) AN EASEMENT TO NORTHERN LIGHTS, INC. RECORDED OCTOBER 14, 2005, INST. NO. 689644.
11) ALL MATTERS DELINEATED ON THE OFFICIAL PLAT OF LOCK PLAT RECORDED IN BOOK 7 OF PLATS PAGE 136.
12) ALL MATTERS DELINEATED ON THE OFFICIAL PLAT OF ELLIS RIDGE RECORDED IN BOOK 15 OF PLATS PAGE 62.
13) AN EASEMENT TO NORTHERN LIGHTS, INC. RECORDED SEPTEMBER 4, 2020 AS INST. NO. 964710.

PROFESSIONAL SURVEYOR REGISTERED 7879 STATE OF IDAHO DAN I PROVOLT

| | | |
|---|---|---|
| S.10, T.59N., R.1W., B.M. | SHEET TITLE: REPLAT OF LOT 1, LOCK PLAT AND LOT 1, ELLIS RIDGE | DATE 07-28-21 SCALE 1"=200' DRAWN DP |
| | PROVOLT LAND SURVEYING, INC PO BOX 580, PONDERAY, ID. 83852 208-290-1725 | PROJ. NO. 1221 CAD FILE ELLIS-ELMRA SHT 1 OF 2 |

ATTACHMENT 2

Print Single Sided Only

RECEIVED
JUL 14 2022
IDWR/NORTH

FORM 202 Rev. 09/16

STATE OF IDAHO
DEPARTMENT OF WATER RESOURCES

Ident. No. _____

# APPLICATION FOR PERMIT

**To appropriate the public waters of the State of Idaho**

1. Name of applicant(s) BEN AND PAULA DUNN LIVING TRUST Phone (208) 263-7473
   Name connector (check one): ☐ and ☐ or ☐ and/or
   Mailing address PO BOX 1 City COLBURN
   State ID ZIP 83864 Email deb3414jd@yahoo.com
2. Name of representative, if any _____ Phone _____
   Mailing address _____ City _____
   State _____ ZIP _____ Email _____
   a. ☐ Send all correspondence for this application to the representative and not to the applicant OR
      ☐ Send original correspondence to the applicant and copies to the representative.
   b. ☐ The representative may submit information for the applicant but is not authorized to sign for the applicant OR
      ☐ The representative is authorized to sign for the applicant. Attach a Power of Attorney or other documentation.
3. Source of water supply GROUNDWATER which is a tributary of _____
4. Location of point(s) of diversion:

| Twp | Rge | Sec | Govt Lot | ¼ | ¼ | ¼ | County | Source | Local name or tag # |
|---|---|---|---|---|---|---|---|---|---|
| 59N | 01W | 10 | | | NW | NW | BONNER | GROUNDWATER | |
| | | | | | | | | | |
| | | | | | | | | | |
| | | | | | | | | | |

5. Water will be used for the following purposes:
   Amount 0.04 CFS (cfs or acre-feet per year) for DOMESTIC purposes from 01-01 to 12-31 (both dates inclusive)
   Amount 0.02 CFS (cfs or acre-feet per year) for STOCKWATER purposes from 01-01 to 12-31 (both dates inclusive)
   Amount .03 CFS (cfs or acre-feet per year) for IRRIGATION purposes from 04-01 to 10-31 (both dates inclusive)
   Amount _____ (cfs or acre-feet per year) for _____ purposes from _____ to _____ (both dates inclusive)
6. Total quantity to be appropriated is (a) .07 cubic feet per second (cfs) and/or (b) _____ acre-feet per year (af).
7. Proposed diverting works:
   a. Describe type and size of devices used to divert water from the source. SAND POINT WELL FOR ONE HOME AND SMALL IRRIGATION
   b. Height of storage dam _____ feet; active reservoir capacity _____ acre-feet; total reservoir capacity _____ acre-feet. If the reservoir will be filled more than once each year, describe the refill plan in item 12. For dams 10 feet or more in height AND having a storage capacity of 50 acre-feet or more, submit a separate Application for Construction or Enlargement of a New or Existing Dam. Application required? ☐ Yes ☐ No
   c. Proposed well diameter is _____ inches; proposed depth of well is _____ feet.
   d. Is ground water with a temperature of greater than 85°F being sought? ☐ Yes ☐ No
   e. If well is already drilled, when? 1994; drilling firm PROPERTY OWNER (ATTACHMENT 1) well was drilled for (well owner) _____; Drilling Permit No. _____.

SUPERSEDED

**For Department Use**

Received by _____ Date _____ Time _____ Preliminary check by _____
Fee $ 100.00 Receipted by NS Receipt No. N040537 Date 7-14-22

SCANNED
NOV 08 2022

8. Description of proposed uses (if irrigation only, go to item 9):
   a. Hydropower; show total feet of head and proposed capacity in kW. _____
   b. Stockwatering; list number and kind of livestock. ~~50 HEAD MIXED STOCK~~
   c. Municipal; must complete and attach the Municipal Water Right Application Checklist.
   d. Domestic; show number of households ~~1 (INCLUDES 0.5 ACRES LAWN~~ / GARDEN IRRIGATION) SEE LN. 9
   e. Other; describe fully. _____

9. Description of place of use:
   a. If water is for irrigation, indicate acreage in each subdivision in the tabulation below.
   b. If water is used for other purposes, place a symbol of the use (example: D for Domestic) in the corresponding place of use below. See instructions for standard symbols.

| TWP | RGE | SEC | NE | | | | NW | | | | SW | | | | SE | | | | TOTALS |
|---|---|---|---|---|---|---|---|---|---|---|---|---|---|---|---|---|---|---|---|
| | | | NE | NW | SW | SE | NE | NW | SW | SE | NE | NW | SW | SE | NE | NW | SW | SE | |
| 59N | 01W | 10 | | | | | D | D | | | | | | | | | | | |
| 59N | 01W | 10 | | | | | .05 | .05 | | | | | | | | | | | |
| | | | | | | | | | | | | | | | | | | | |
| | | | | | | | | | | | | | | | | | | | |
| | | | | | | | | | | | | | | | | | | | |

Total number of acres to be irrigated: 1.0

10. Describe any other water rights used for the same purposes as described above. Include water delivered by a municipality, canal company, or irrigation district. If this application is for domestic purposes, do you intend to use this water, water from another source, or both, to irrigate your lawn, garden, and/or landscaping? _____

SUPERSEDED

11. a. Who owns the property at the point of diversion? APPLICANT
    b. Who owns the land to be irrigated or place of use? APPLICANT
    c. If the property is owned by a person other than the applicant, describe the arrangement enabling the applicant to make this filing: _____

12. Describe your proposal in narrative form and provide additional explanation for any of the items above. Attach additional pages if necessary. PHYSICAL ADDRESS 339 NOOGIE LN. ELLIS RIDGE REPLAT LOCK PLAT SUBDIVISION LOT 1. (ATTACHMENT 2)

13. Time required for completion of works and application of water to proposed beneficial use is 1 years (minimum 1 year).

14. **MAP OF PROPOSED PROJECT REQUIRED** - Attach an 8½" x 11" map or maps clearly identifying the proposed point of diversion, place of use, section #, township & range. The map scale shall not be less than two (2) inches equal to one (1) mile.

**The information contained in this application is true to the best of my knowledge. I understand that any willful misrepresentations made in this application may result in rejection of the application or cancellation of an approval.**

Benny E. Dunn
Signature of Applicant
BENNY E. DUNN
Print Name (and title, if applicable)

Paula Dunn
Signature of Applicant
PAULA DUNN
Print Name (and title, if applicable)

(SEE ATTACHMENT 3, TRUST)

SCANNED NOV 08 2022

# GENERAL AFFIDAVIT

State of Idaho,

County of Bonner, City of Sandpoint

The following person came and appeared before me, the undersigned notary, the within named Robert H. Straley Jr., who is a resident of Bonner County, State of Idaho, currently residing at 31 Elmira Rd, Sandpoint ID 83864, and makes his statement and General Affidavit upon oath and affirmation of belief and personal knowledge that the following matters, facts and things set forth are true and correct to the best of his knowledge.

I, Robert H. Straley Jr. do hereby certify the following: Sometime about 1994 my family and I occupied the property now known as 339 Noogie Lane, Sandpoint, Idaho 83864, recorded with Bonner County as RP59N01W10, Lot 1, Lock Plat (Attachment 2). At that time a sand point water system was installed on the property in order to provide domestic water to a mobile home. The location of the well is approximately 182' north and 87' east of the southwest property marker, labeled "PROVOLT PLS 7879."

Initially, a hole was dug at this location using a backhoe. This hole was approximately 25' deep and 4' in diameter. Concrete rings were lowered into this hole, one atop the other. Then a small diameter drive point (believed to be no greater than 2") was driven into the ground approximately another 10' to reach the water table and supply water to the mobile home by way of a pump and pressure tank. Total depth of the well is approximately 35'.

DATED this 11 day of July, 2022

Robert H Straley Jr.

Signature of Affiant

SWORN to subscribed before me, this 11 day of July, 2022

Leigh-Ann M Florence

NOTARY PUBLIC

My Commission Expires 09/24/2025

Leigh-Ann M Florence
COMMISSION EXPIRES
NOTARY
PUBLIC
09/24/2025
COMM. NO. 29192091
STATE OF IDAHO

ATTACHMENT 1

BEN AND PAULA DUNN LIVING TRUST
TRUST AGREEMENT

This TRUST AGREEMENT is made by and between the SETTLORS, BENNY E. DUNN and PAULA N. DUNN, and the TRUSTEE, BENNY E. DUNN and PAULA N. DUNN.

## ARTICLE I
## PRIMARY PROVISIONS

### 1.1 DECLARATION OF TRUST

BENNY E. DUNN and PAULA N. DUNN hereby declare, agree and acknowledge that they are acting as SETTLORS to establish and settle the BEN AND PAULA DUNN LIVING TRUST under the terms and provisions of this TRUST AGREEMENT.

### 1.2 FULL NAMES OF SETTLORS

The legal names of the SETTLORS are BENNY E. DUNN, also known as "BENNY EUGENE DUNN and BEN DUNN", and PAULA N. DUNN, also known as "PAULA NINA DUNN and PAULA DUNN".

### 1.3 FORM OF TITLE

**The title of each item of property transferred to the BEN AND PAULA DUNN LIVING TRUST shall be held as "BENNY E. DUNN and PAULA N. DUNN, Trustee, BEN AND PAULA DUNN LIVING TRUST."** Provided, that title of any item of property may also be held by the BEN AND PAULA DUNN LIVING TRUST in any other form which designates ownership by the TRUSTEE or the TRUST.

### 1.4 ADDRESS OF THE TRUST

The address of the TRUST is PO Box 1, Colburn, ID 83865.

### 1.5 NAMING THE TRUSTEE

During their joint lifetimes the TRUSTEE will be: BENNY E. DUNN and PAULA N. DUNN. Upon the death or incapacity of either TRUSTEE, the survivor of them shall continue to serve as TRUSTEE. Except as otherwise provided in this Trust Agreement, in the event any TRUSTEE or any successor as herein defined should fail to qualify as TRUSTEE hereunder, should resign, or for any reason should cease to act in such capacity, creating for any reason a vacancy in the office of



SCANNED
2022

ATTACHMENT 3

State of Idaho
Department of Water Resources

# Application For Permit

Place Of Use Boundary
PLS Sections
Quarter Quarters
~~Point of Diversion~~
Taxlots

0 0.025 0.05 0.1 Miles

X = Point of ~~Diver~~ Diversion (well)

□ = Place of use

N

Tax parcel information provided by Bonner County.

SCANNED
NOV 08 2022

IDAHO DEPARTMENT OF
WATER RESOURCES

322 E Front Street, Suite 648, Boise ID 83702 • PO Box 83720, Boise ID 83720-0098
Phone: 208-287-4800 • Fax: 208-287-6700 • Email: idwrinfo@idwr.idaho.gov • Website: idwr.idaho.gov

Governor Brad Little Director Mathew Weaver

February 23, 2024

BEN AND PAULA DUNN LIVING TRUST
PO BOX 1
COLBURN ID 83865-0001

RE: License No. 98-8103

**ISSUANCE OF LICENSE**

Dear Water Right Holder(s):

The Department of Water Resources ("Department") has issued the enclosed Water Right License confirming that a water right has been established in accordance with your permit. Please be sure to thoroughly review all the conditions of approval listed on your license. The conditions may include ongoing requirements, such as maintenance of a measuring device or implementation of mitigation, as well as information about how your water use may be administered, such as regulation by a watermaster in a water district.

The license is a PRELIMINARY ORDER issued by the Department pursuant to Rule 730 of the Department's Rules of Procedure (IDAPA 37.01.01.730). It can and will become a final order without further action by the Department unless a party petitions for reconsideration, files exceptions, or requests a hearing as described in the enclosed information sheet.

Also, please note that water right owners are required to report any change of water right ownership and/or mailing address to the Department within 120 days of the change. Water right forms are available from any office of the Department or on the Department's website at idwr.idaho.gov

If you have any questions concerning the enclosed information, please contact me at (208) 287-4925.

Sincerely,

*Phill Hummer*

Phill Hummer
Water Rights Section Manager

Enclosure(s)

## CERTIFICATE OF SERVICE

I hereby certify that on February 23, 2024, I served a true and correct copy of Water Right License No. 98-8103 by U.S. Mail, postage prepaid, to the following:

BEN AND PAULA DUNN LIVING TRUST (Current Owner)
PO BOX 1
COLBURN ID 83865-0001

Debra Mansfield
Technical Records Specialist 1

# EXPLANATORY INFORMATION TO ACCOMPANY A PRELIMINARY ORDER

(To be used in connection with actions when a hearing was **not** held)

(Required by Rule of Procedure 730.02)

The accompanying order or approved document is a "**Preliminary Order**" issued by the department pursuant to section 67-5243, Idaho Code. **It can and will become a final order without further action of the Department of Water Resources ("department") unless a party petitions for reconsideration, files an exception and brief, or requests a hearing as further described below:**

## PETITION FOR RECONSIDERATION

Any party may file a petition for reconsideration of a preliminary order with the department within fourteen (14) days of the service date of this order. **Note: the petition must be received by the department within this fourteen (14) day period.** The department will act on a petition for reconsideration within twenty-one (21) days of its receipt, or the petition will be considered denied by operation of law. See Section 67-5243(3) Idaho Code.

## EXCEPTIONS AND BRIEFS

Within fourteen (14) days after: (a) the service date of a preliminary order, (b) the service date of a denial of a petition for reconsideration from this preliminary order, or (c) the failure within twenty-one (21) days to grant or deny a petition for reconsideration from this preliminary order, any party may in writing support or take exceptions to any part of a preliminary order and may file briefs in support of the party's position on any issue in the proceeding with the Director. Otherwise, this preliminary order will become a final order of the agency.

## REQUEST FOR HEARING

Unless a right to a hearing before the Department or the Water Resource Board is otherwise provided by statute, any person aggrieved by any final decision, determination, order or action of the Director of the Department and who has not previously been afforded an opportunity for a hearing on the matter may request a hearing pursuant to section 42-1701A(3), Idaho Code. A written petition contesting the action of the Director and requesting a hearing shall be filed within fifteen (15) days after receipt of the denial or conditional approval.

## ORAL ARGUMENT

If the Director grants a petition to review the preliminary order, the Director shall allow all parties an opportunity to file briefs in support of or taking exceptions to the preliminary order and may schedule oral argument in the matter before issuing a final order. If oral arguments are to be heard, the Director will within a reasonable time period notify each party of the place, date and hour for the argument of the case. Unless the Director orders otherwise, all oral arguments will be heard in Boise, Idaho.

## CERTIFICATE OF SERVICE

All exceptions, briefs, requests for oral argument and any other matters filed with the Director in connection with the preliminary order shall be served on all other parties to the proceedings in accordance with IDAPA Rules 37.01.01302 and 37.01.01303 (Rules of Procedure 302 and 303).

## FINAL ORDER

The Director will issue a final order within fifty-six (56) days of receipt of the written briefs, oral argument or response to briefs, whichever is later, unless waived by the parties or for good cause shown. The Director may remand the matter for further evidentiary hearings if further factual development of the record is necessary before issuing a final order. The department will serve a copy of the final order on all parties of record.

Section 67-5246(5), Idaho Code, provides as follows:

> Unless a different date is stated in a final order, the order is effective fourteen (14) days after its service date if a party has not filed a petition for reconsideration. If a party has filed a petition for reconsideration with the agency head, the final order becomes effective when:
>
> (a) The petition for reconsideration is disposed of; or
> (b) The petition is deemed denied because the agency head did not dispose of the petition within twenty-one (21) days.

## APPEAL OF FINAL ORDER TO DISTRICT COURT

Pursuant to sections 67-5270 and 67-5272, Idaho Code, if this preliminary order becomes final, any party aggrieved by the final order or orders previously issued in this case may appeal the final order and all previously issued orders in this case to district court by filing a petition in the district court of the county in which:

i. A hearing was held,
ii. The final agency action was taken,
iii. The party seeking review of the order resides, or
iv. The real property or personal property that was the subject of the agency action is located.

The appeal must be filed within twenty-eight (28) days of this preliminary order becoming final. See section 67-5273, Idaho Code. The filing of an appeal to district court does not itself stay the effectiveness or enforcement of the order under appeal.

STATE OF IDAHO
DEPARTMENT OF WATER RESOURCES
**IN-OFFICE REVIEW/BENEFICIAL USE FIELD REPORT**

## A. GENERAL INFORMATION

Exam Date: 01/14/2024

1. Does this qualify for an in-office field exam (IDAPA 37.03.02.035.01.r)? _X_Y ____N
   a. _X_ Irrigation of 5 acres or less
   b. ____ Storage of up to 14.6 AF for stock water purposes only
   c. ____ Any use other than irrigation or storage, if the combined diversion rate is 0.24 cfs or less.
   d. _X_ Other Domestic

2. Current Owner: **BEN & PAULA DUNN LIVING TRUST**
   Owner of Record Correct? _____N
   Address of Record Correct? _____N
   If No Explain:

3. Beneficial Use Fees have been paid: _X_Y ____N Receipt No: C117437

4. Source: **GROUNDWATER** Tributary: **NA**

Method of Determination: GIS and Tax lot data.
Change in Source: ____Y _X_N

## B. OVERLAP REVIEW

1. Other water rights with the same place of use: _X_ No Overlap

| Water Right No. | Source | Purpose of Use | Basis |
|---|---|---|---|
| NONE | NA | NA | NA |

Comments: There are no rights overlapping the permit place of use (POU).

2. Other water rights with the same point of diversion: _X_ NO Overlap

| Water Right No. | Source | Purpose of Use | Basis |
|---|---|---|---|
| NONE | NA | NA | NA |

Comments: There are no rights sharing the permit point of diversion (POD).

## C. DIVERSION AND DELIVERY SYSTEM

1. Location of Point(s) of Diversion:

| Source | Govt. Lot | ¼ | ¼ | ¼ | Sec. | Twp. | Rge. | | County |
|---|---|---|---|---|---|---|---|---|---|
| Well Pump | | | NW | NW | 10 | 59N | 01W | B.M. | BONNER |

Method of Determination: GIS and Tax lot data.

Change in POD? ___Y _X_N Amendment Required? ____Y _X_N

2. Place of Use: IRRIGATION

| TWP | RGE | Sec | NE | | | | NW | | | | SW | | | | SE | | | | Total |
|---|---|---|---|---|---|---|---|---|---|---|---|---|---|---|---|---|---|---|---|
| | | | NE | NW | SW | SE | NE | NW | SW | SE | NE | NW | SW | SE | NE | NW | SW | SE | |
| 59N | 01W | 10 | | | | | | 0.8 | | | | | | | | | | | 0.8 |
| | | Lot# | | | | | | | | | | | | | | | | | |
| | | | | | | | | | | | | | | | | Total Acres = | | | 0.8 |

Place of Use: DOMESTIC

| TWP | RGE | Sec | NE | | | | NW | | | | SW | | | | SE | | | | Total |
|---|---|---|---|---|---|---|---|---|---|---|---|---|---|---|---|---|---|---|---|
| | | | NE | NW | SW | SE | NE | NW | SW | SE | NE | NW | SW | SE | NE | NW | SW | SE | |
| 59N | 01W | 10 | | | | | | X | | | | | | | | | | | |
| | | Lot # | | | | | | | | | | | | | | | | | |

Method of Determination: Bonner County Maps, GIS, and Tax Lot Data.

Change in POU? ____Y __X_N Amendment Required? ____Y __X_N

__Delivery System Diagram Attached (required). Indicate all major components and distances between components.

Indicate weir size/pipe as applicable:

_X_ Aerial Photo Attached (required for irrigation of 10+ acres).

_X_ Photo of Diversion and System Attached

| 3. Diversion Id No.* | Motor Make | HP | Pump Model | Pump Make | Pump Serial No. or Discharge Size |
|---|---|---|---|---|---|
| Well Pump | GOULDS | 1.0 | J-10 | XYLEM | 1" |

**Code to correspond with No. on map and aerial photo*

**D. FLOW MEASUREMENTS**

| 1. Measurement Equipment | Type | Make | Model No. | Serial No. | Size | Calib. Date |
|---|---|---|---|---|---|---|
| NONE | NA | NA | NA | NA | NA | NA |

2. Measurement Comments: The permit holder provided a photo of the 1.0 Hp pump and a copy of the pump technical brochure. A maximum head of about 35-ft was estimated using Google Earth measurements, the DRG map, and the head reported by the permit holder in section 5 of the Proof of Beneficial received.

**E. FLOW CALCULATIONS** ___Additional Computation Sheets Attached

Measured Method:

A theoretical rate based on the pump technical specs. and Administrative Memo #17 were used to determine a reasonable rate of diversion.

1cfs=448.83117 GPM
Tech. Specs. Output for J-10 (twin pipe-deep well) @35PSI+35 ft head=16.8 GPM, or approximately 0.04cfs
The maximum output supported by the technical information (see figure A below) is 0.04cfs.

TWIN PIPE PERFORMANCE RATINGS

| HP/Model | | ½ HP - J5 | | | | ¾ HP - J7 | | | | | 1 HP - J10 | | | | | 1½ HP - J15 | |
|---|---|---|---|---|---|---|---|---|---|---|---|---|---|---|---|---|---|
| Well Casing min. I.D. | | 4 | | | 4½ | 4 | | | 4½ | | 4 | | | 4½ | | 4½ | |
| Pressure Pipe Size (in.) | | 1 | | | 1¼ | 1 | | | 1¼ | | 1 | | | 1¼ | | 1¼ | |
| Suction Pipe Size (in.) | | 1¼ | | | 1½ | 1¼ | | | 1½ | | 1¼ | | | 1½ | | 1½ | |
| Jet Assembly Package ① | | FT4B-13 | FT4B-31 | FT4B-08 | FT5B-14 | FT4B-14 | FT4B-34 | FT4B-18 | FT5B-47 | FT5B-48 | FT4B-44 | FT4B-43 | FT4B-18 | FT5B-49 | FT5B-11 | FT5B-12 | FT5B-11 |
| Jet Body (only) | | AT4B | | | AT5B | AT4B | | | AT5B | | AT4B | | | AT5B | | AT5B | |
| Nozzle | | AN017 | AN016 | AN015 | AN018 | AN017 | AN016 | AN016 | AN018 | AN017 | AN017 | AN017 | AN016 | AN019 | AN018 | AN019 | AN018 |
| Venturi | | AD726 | AD723 | AD720 | AD724 | AD729 | AD725 | AD722 | AD730 | AD725 | AD730 | AD727 | AD722 | AD732 | AD727 | AD734 | AD727 |
| Control Valve Setting (PSI) ② | | 30 | 30 | 30 | 30 | 28 | 29 | 30 | 28 | 30 | 31 | 33 | 35 | 30 | 32 | 35 | 40 |
| | Feet | Gallons Per Minute (GPM) 30-50 PSI Pressure Switch Setting | | | | | | | | | | | | | | | |
| Depth to Jet Assembly (based on submergence of 5 feet) | 30 | 13.0 | 11.0 | | | 15.8 | | | 16.6 | | 17.0 | | | 19.3 | | 21.2 | |
| | 40 | 11.8 | 9.0 | | | 15.7 | | | 16.0 | | 16.6 | | | 18.0 | | 20.0 | |
| | 50 | | 7.6 | | 6.9 | 13.2 | | | 15.0 | | 14.4 | | | 16.0 | | 16.1 | |
| | 60 | | 7.0 | 5.2 | 6.4 | 10.2 | | | 13.0 | | 11.5 | 11.2 | | 14.3 | | 15.0 | |
| | 70 | | | 4.7 | 5.6 | | 8.2 | | 11.0 | 10.0 | | 9.3 | | 12.6 | | 14.0 | 11.2 |
| | 80 | | | 3.8 | 4.8 | | 6.5 | | | 8.6 | | 7.3 | 6.2 | 10.0 | 10.0 | | 10.6 |
| | 90 | | | 3.1 | 4.1 | | 5.0 | 5.0 | | 7.3 | | | 6.1 | | 8.7 | | 9.0 |
| | 100 | | | | | | | 4.4 | | 6.0 | | | 5.4 | | 7.0 | | 7.6 |
| | 110 | | | | | | | 3.5 | | 5.0 | | | 4.5 | | 5.7 | | 6.2 |
| | 120 | | | | | | | | | | | | | | 4.5 | | 5.2 |
| | 130 | | | | | | | | | | | | | | | | 4.0 |
| | 140 | | | | | | | | | | | | | | | | 2.8 |
| | 150 | | | | | | | | | | | | | | | | 1.5 |
| | 160 | | | | | | | | | | | | | | | | |
| | 170 | | | | | | | | | | | | | | | | |

NOTE: An offset of 50 feet will result in a decrease of about 25% from ratings as shown.

① Jet assembly package includes jet body (AT4), venturi, nozzle and foot valve.

② Deep well jet pumps require a pressure control device on the discharge to provide back pressure to the jet assembly. Failure to control the amount of discharge by adjusting the back pressure (pressure control valve setting) will cause the pump to lose prime. On pumps with low control valve settings, up to 40 psi, a simple ball valve or AV15 will work. On systems with control valve settings of 40 - 80 psi an AV22, AV22KIT or AV21 is required. They measure the pressure on the outbound side so that the high pressure does not open the 30-50 psi switch and turn the pump off.

Figure A. J10 Pump Technical sheet provided by permit holder with Proof of Beneficial Use . The pump is described as a 1 Hp J-10 with a 1" discharge. No tables in the technical brochure for any configuration of the pump provide an output greater than 0.04cfs, even at a lesser static water level.

Theoretical Calculation= 0.04cfs
Pump Technical Rating= >17.0 GPM
Permit allowed = 0.07cfs
Recommendation= 0.04cfs

Comments:

The Proof of Beneficial Use stated 1 acre of irrigation was developed, but I was only able to support an estimated 0.8 acres of arable land via GIS imagery, so the permit holder was notified that I would be processing the license for the confirmed area.

Approximately 0.04cfs is possible with the 1.0 Hp pump and the total confirmed watered area is 0.8acres. According to Administrative memo #17 up to 0.03cfs per acre is standard for the irrigation of up to 5 acres. I am recommending a diversion rate of 0.02cfs for irrigation on the license. There is 1 home evident within the POU, I am recommending a rate of 0.04cfs for domestic use on the license, as per Administrative Memo #22. Based on the data provided by the permit holder on the pump technical sheets I am recommending the entire system carry a rate of 0.04cfs on the license.

**F. VOLUME CALCULATIONS**

1. Volume Calculations for Irrigation:

$V_{I.R.}$ = (Acres Irrigated) x (Irrigation Requirement) = 0.8-acre x 3.0 AF= 2.4 AF

$V_{D.R.}$ = [Diversion Rate (cfs)] x (Days in Irrigation season) x 1.9835 = 0.04cfs x 214 days x 1.9835= 17.0 AF

V = Smaller of $V_{I.R.}$ and $V_{D.R.}$ = 2.4 AF

Comments:

Based on the field headgate standard of 3.0 AF per acre/annually, I am recommending 2.4 AF annual volume for irrigation on the license. I am recommending an annual volume of 0.6 AF on the license for domestic use, as per Administrative Memo #22.

**G. PURPOSE OF USE**

Irrigation _X_Y ____N # Stock__NA____ Domestic # of Homes _1__

Change in Purpose of Use? ____Y _X_N

Method of Determination: Bonner County Maps, GIS, and Tax Lot Data

**H. NARRATIVE/REMARKS/COMMENTS**

This permit for the irrigation of 1 acre and 1 domestic home qualifies for an in-office examination for license. The permit holder submitted the Proof of Beneficial Use, received by IDWR on November 30, 2023, stating in section #5 that the beneficial use was developed for 1 home and 1 acre of irrigation. The proof included photos of the well, pump, and 80-gallon pressure tank. The proof included an aerial image identifying the locations of the home, well, 2 spigots, and a supplemental page with a description of the system. The lawn and garden are irrigated from the spigots via hoses to portable sprinklers. I was able to estimate approximately 0.8 acres irrigation using aerial imagery (figure 1), so I called the permit holder on January 10, 2024, requesting additional information including a map of the irrigated area(s). An email was received from the permit holder on January 13, 2024, with an attached aerial image outlining the irrigation place of use (figure 3). The permit holder also submitted a sketch of the POU with on site measurements he made for planting grass seed, but the sketch was not to scale and was to blurry to provide much useful information (figure 5).

After reviewing the permit holder's response to the information request approximately 0.8 acres of irrigated area was confirmed (see figures 2 & 4). The permit holder submitted a technical brochure with data tables for the pump, which listed the pump output at 16.8 GPM, or 0.04cfs. I am recommending the license be issued for 0.8 acres of irrigation with a rate of 0.02cfs (as per Administrative Memos #17 and 6). I am recommending an annual volume of 2.4 AF for irrigation on the license, based on the standard field headgate calculation found in this report. In aerial imagery 1 structure is visible in the NWNW quarter/quarter. I am recommending a rate of 0.04cfs and an annual volume of 0.6 AF for domestic use on the license, as per Administrative memo #22.

I am recommending the license be issued with a total rate of 0.04cfs and conditions 132, 004, and X31. Condition R66 was replaced with condition X31 at licensing, as the irrigated area is less than 1 acre. Condition 046 was removed at licensing as the development is complete.

Have conditions of permit approval been met? _X_Yes ____No

**I. RECOMMENDATIONS**

1. Recommended Amounts:

| BENEFICIAL USE | PERIOD OF USE | DIVERSION RATE | ANNUAL VOLUME |
|---|---|---|---|
| IRRIGATION | 04/01 TO 10/31 | 0.02CFS | 2.4 AF |
| DOMESTIC | 01/01 TO 12/31 | 0.04CFS | 0.6 AF |
| | Totals: | 0.04CFS | 3.0 AF |

2. Recommended Amendments:

___Change P.D. as reflected above ___Add P.D. as reflected above _X_None

___Change P.U. as reflected above ___Add P.U. as reflected above _X_None

**J. AUTHENTICATION- Bob Howe- Water Resource Agent**

Field Examiner Bob Howe Date 2/13/24

Reviewer [illegible] Date 2/20/24

Figure 1- Bonner County Imagery- Appurtenant parcel at center.

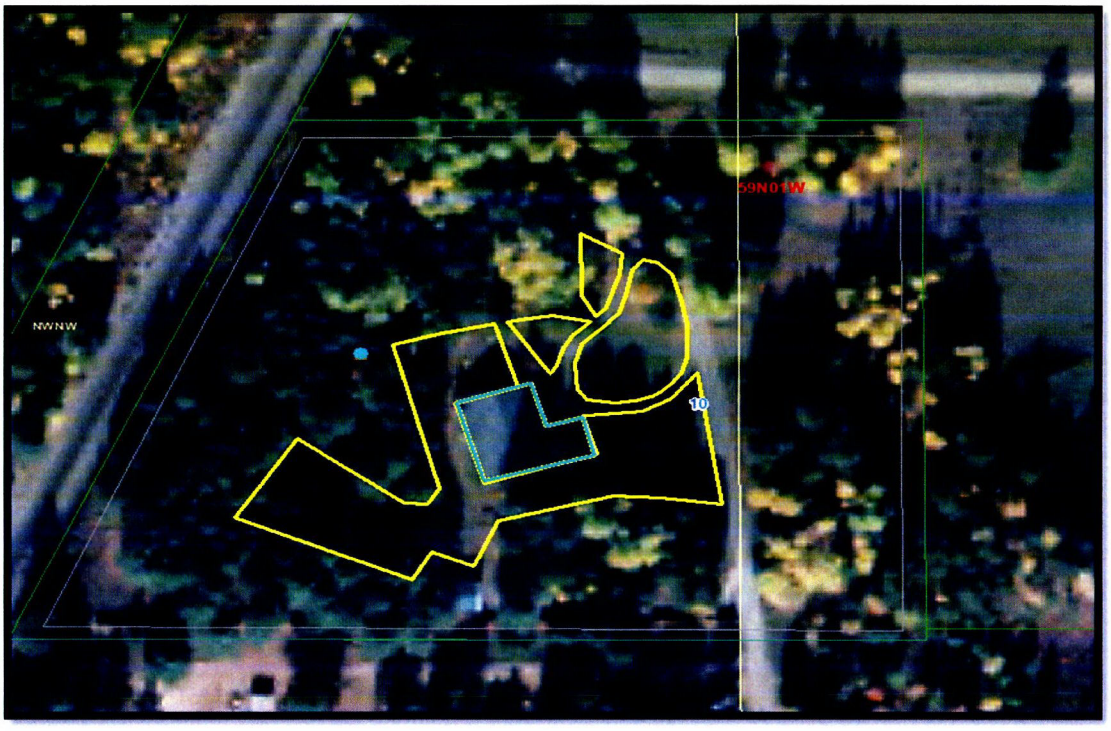


Figure 2- GIS 2021- Irrigation POU outlined in yellow. Domestic POU outlined in blue. The well is identified by a blue point.

Figure 3- Bonner County aerial image with irrigated areas outlined in black. The image was emailed to the Department by the permit holder.

Figure 4- Bonner County GIS aerial imagery-measurement of irrigated areas indicated in the permit holder's images.

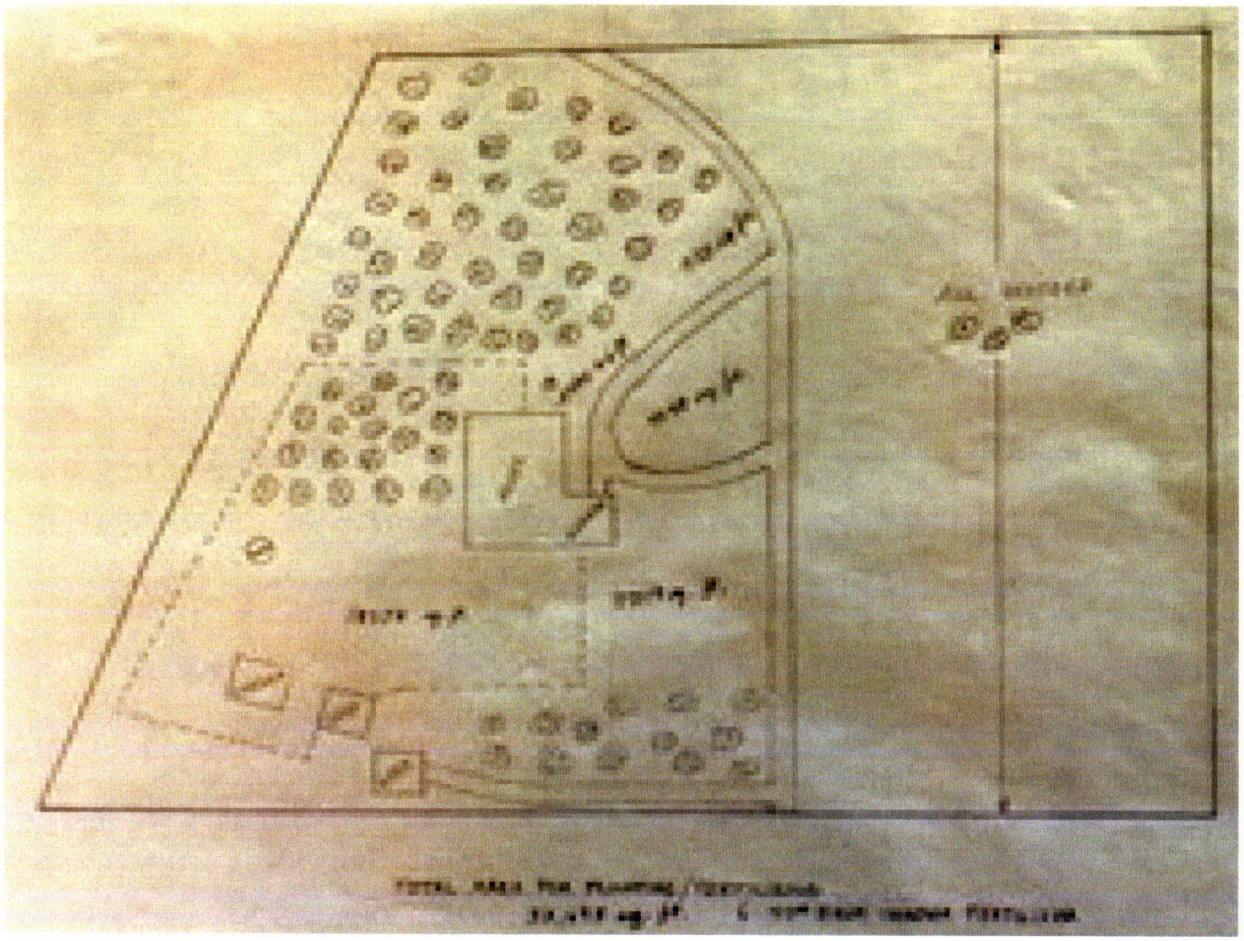

Figure 5- Photo emailed by the permit holder of a sketch of the irrigated area and fence line with measurements taken on site.

# Beneficial Use Proof Evaluation

Permit Number: 98-8103 Reviewer: AVeibell Review Date: 12/29/2023

## Acceptability

1) Is the contact on the request the current permit holder? Yes
2) Does the address of record need to be updated? No
3) Proof Submitted Date: 11/30/2023
4) Proof Due Date: 3/1/2024
5) Days added for weekend due date? 0
6) Days added for holiday due date? 0
7) Number of days late: -92
8) Proof received timely? Yes

## Analysis

1) Are the water uses correct? Yes
2) Are one of the following items required?
    a. Measuring Device -- No
    b. Lockable Device --No
    c. Fish Screen -- No
3) Are the required items installed? Yes
    a. Measuring Device -- No
    b. Lockable Device --No
    c. Fish Screen -- No
4) Is there a request to waive the required items? No
5) Drilling Permit Number: 794258
6) Is a drilling permit upgrade needed? No
7) Was a well drillers report filed? Yes
8) Is proof accepted? Yes

## Fees

1) Is a licensing exam fee required? Yes
2) Was proof submitted with an exam report from a CWE? No
3) Filing fee due: $50.00
4) Filing fee submitted: $50.00
5) Remaining fee or (refund): $0.00

## Receipt IDs

N040537

## Comments

Proof deemed acceptable. Gave file to water right agent for in-house license review. Water right agent will enter the proof made date in AdHoc at the time of licensing.

IDAHO DEPARTMENT OF
WATER RESOURCES

Northern Region • 7600 N Mineral Drive, Suite 100 • Coeur D'Alene, ID 83815-7763
Phone: 208-762-2800 • Fax: 208-762-2819 • Email: northerninfo@idwr.idaho.gov • Web: idwr.idaho.gov

Governor Brad Little

Director Gary Spackman

February 27, 2023

BEN AND PAULA DUNN LIVING TRUST
PO BOX 1
COLBURN ID 83865-0001

RE: Permit No. 98-8103

**Permit Approval Notice**

Dear Permit Holder(s):

The Department of Water Resources ("Department") has issued the enclosed permit authorizing you to establish a new water right. Please be sure to thoroughly review all the conditions of approval listed on your permit. The conditions include requirements that you must accomplish, such as timely submittal of proof of beneficial use or installation of a measuring device, as well as information about how your water use may be administered, such as regulation by a watermaster in a water district. Failure to comply with the conditions of approval may result in your permit lapsing or being canceled.

The permit is a PRELIMINARY ORDER issued pursuant to Rule 730 of the Department's Rules of Procedure (IDAPA 37.01.01.730). It can and will become a final order without further action by the Department unless a party petitions for reconsideration, files exceptions, or requests a hearing as described in the enclosed information sheet.

The final step in the water right process is issuance of a water right license. To receive a water right license, you must divert and use water to the full extent intended and submit a *Statement of Completion for Submitting Proof of Beneficial Use* by the date shown in condition no. 1 of your permit. The Department will send you a *Proof Due Notice* approximately 60 days prior to the date listed in condition no. 1 of your permit.

You may also require approvals from other Department programs, such as Ground Water Protection, Safety of Dams, or Stream Channel Protection, to accomplish your proposed development. Please call or visit any Department office or see the Department's website at idwr.idaho.gov for more information about these programs.

SCANNED
MAR 0 1 2023

**Please be advised that Idaho Code § 42-248, requires you or the owner of this water permit to maintain current ownership and address records on file with the Department. Forms to file an assignment of permit and/or a change in the address of the permit owner are available from any Department office or at the Department's website at www.idwr.idaho.gov.**

If you have any questions concerning the enclosed information, please contact the Northern Region Office at (208) 762-2800.

Sincerely,

Luke Bates
Interim Water Rights Supervisor

Enclosure(s)

SCANNED
MAR 0 1 2023

## CERTIFICATE OF SERVICE

I hereby certify that on February 27, 2023, I served a true and correct copy of Permit to Appropriate Water No. 98-8103 by U.S. Mail, postage prepaid, to the following:

BEN AND PAULA DUNN LIVING TRUST (Current Owner)
PO BOX 1
COLBURN ID 83865-0001

Tammy Alleman
Administrative Assistant 1



SCANNED
MAR 0 1 2023

# EXPLANATORY INFORMATION TO ACCOMPANY A PRELIMINARY ORDER

(To be used in connection with actions when a hearing was **not** held)

(Required by Rule of Procedure 730.02)

The accompanying order or approved document is a "**Preliminary Order**" issued by the department pursuant to section 67-5243, Idaho Code. **It can and will become a final order without further action of the Department of Water Resources ("department") unless a party petitions for reconsideration, files an exception and brief, or requests a hearing as further described below:**

## PETITION FOR RECONSIDERATION

Any party may file a petition for reconsideration of a preliminary order with the department within fourteen (14) days of the service date of this order. **Note: the petition must be received by the department within this fourteen (14) day period.** The department will act on a petition for reconsideration within twenty-one (21) days of its receipt, or the petition will be considered denied by operation of law. See Section 67-5243(3) Idaho Code.

## EXCEPTIONS AND BRIEFS

Within fourteen (14) days after: (a) the service date of a preliminary order, (b) the service date of a denial of a petition for reconsideration from this preliminary order, or (c) the failure within twenty-one (21) days to grant or deny a petition for reconsideration from this preliminary order, any party may in writing support or take exceptions to any part of a preliminary order and may file briefs in support of the party's position on any issue in the proceeding with the Director. Otherwise, this preliminary order will become a final order of the agency.

## REQUEST FOR HEARING

Unless a right to a hearing before the Department or the Water Resource Board is otherwise provided by statute, any person aggrieved by any final decision, determination, order or action of the Director of the Department and who has not previously been afforded an opportunity for a hearing on the matter may request a hearing pursuant to section 42-1701A(3), Idaho Code. A written petition contesting the action of the Director and requesting a hearing shall be filed within fifteen (15) days after receipt of the denial or conditional approval.

## ORAL ARGUMENT

If the Director grants a petition to review the preliminary order, the Director shall allow all parties an opportunity to file briefs in support of or taking exceptions to the preliminary order and may schedule oral argument in the matter before issuing a final order. If oral arguments are to be heard, the Director will within a reasonable time period notify each party of the place, date and hour for the argument of the case. Unless the Director orders otherwise, all oral arguments will be heard in Boise, Idaho.



SCANNED
MAR 0 1 2023

## CERTIFICATE OF SERVICE

All exceptions, briefs, requests for oral argument and any other matters filed with the Director in connection with the preliminary order shall be served on all other parties to the proceedings in accordance with IDAPA Rules 37.01.01302 and 37.01.01303 (Rules of Procedure 302 and 303).

## FINAL ORDER

The Director will issue a final order within fifty-six (56) days of receipt of the written briefs, oral argument or response to briefs, whichever is later, unless waived by the parties or for good cause shown. The Director may remand the matter for further evidentiary hearings if further factual development of the record is necessary before issuing a final order. The department will serve a copy of the final order on all parties of record.

Section 67-5246(5), Idaho Code, provides as follows:

> Unless a different date is stated in a final order, the order is effective fourteen (14) days after its service date if a party has not filed a petition for reconsideration. If a party has filed a petition for reconsideration with the agency head, the final order becomes effective when:
>
> (a) The petition for reconsideration is disposed of; or
> (b) The petition is deemed denied because the agency head did not dispose of the petition within twenty-one (21) days.

## APPEAL OF FINAL ORDER TO DISTRICT COURT

Pursuant to sections 67-5270 and 67-5272, Idaho Code, if this preliminary order becomes final, any party aggrieved by the final order or orders previously issued in this case may appeal the final order and all previously issued orders in this case to district court by filing a petition in the district court of the county in which:

i. A hearing was held,
ii. The final agency action was taken,
iii. The party seeking review of the order resides, or
iv. The real property or personal property that was the subject of the agency action is located.

The appeal must be filed within twenty-eight (28) days of this preliminary order becoming final. See section 67-5273, Idaho Code. The filing of an appeal to district court does not itself stay the effectiveness or enforcement of the order under appeal.



SCANNED
MAR 0 1 2023

RECEIVED
DEC 05 2022
IDWR / NORTH

# AFFIDAVIT OF PUBLICATION

STATE OF IDAHO )
) ss.
County of Bonner )

Italia Jimenez, being first duly sworn on oath, deposes and states:

1. I am a citizen of the United States of America, over the age of 18 years, a resident of Bonner County, Idaho, and am not a party to the proceedings referred to in the attached Legal Notice.
My business address is P.O. Box 159, Sandpoint, Idaho.

2. I am the bookkeeper of the Bonner County Daily Bee, a newspaper of general publication in Bonner County, Idaho;

3. Said newspaper has been continuously and uninterruptedly published in Bonner County, Idaho during a period of 12 months prior to the first publication of said Notice, and thereafter.

4. The attached Notice was published in the regular and entire issue of the Bonner County Daily Bee for a period of 2 consecutive weeks, commencing on the 17th day of November, 2022, and ending on the 24th day of November, 2022.

Italia Jimenez

State of Idaho, county of Bonner ss.
On this 29th day of November, in the year of 2022 before me, Katrina George, Notary Public, personally appeared Italia Jimenez known or identified to me to be the person whose name is subscribed to the within instrument, and acknowledged to me that he/she (or they) executed the same.

Katrina George
Notary Public
Residing at: Kootenai County

**My Commission Expires 8/29/23**

SCANNED
MAR 01 2023

## LEGAL NOTICE

The following application(s) have been filed to appropriate the public waters of the State of Idaho:

**96-10785**
DILLON BLOOMER
ROGER BLOOMER
240 SHALOM CT
CLARK FORK, ID 83811-7809
Point of Diversion SENWSW
S20 T55N R03E
BONNER County
Source SPRING
Tributary SINKS
Use: DOMESTIC
1 /1 to 12/31
Total Diversion: 0.04 CFS
Date Filed: 11-01-2022
Place Of Use: DOMESTIC
T55N R03E S20 NWSW

**96-12257**
SUSAN FAIRCLOUGH
4858 BERNAL AVE
PLEASANTON, CA 94566-1155
Point of Diversion SWNESW
S6 T56N R02E
BONNER County
Source SPRING
Tributary CARTER CREEK
Use: DOMESTIC
1 /1 to 12/31
Total Diversion: 0.04 CFS
Date Filed: 10-14-2022
Place Of Use: DOMESTIC
T56N R02E S6 NESW

**96-12384**
MARTIN HOYE
8459 SUNNYSIDE RD
SANDPOINT, ID 83864-6664
Point of Diversion NESESW
S2 T57N R01W
BONNER County
Source SPRING
Tributary LAKE PEND OREILLE
Use: FIRE PROTECTION STORAGE
1 /1 to 12/31 2 AF
Use: IRRIGATION FROM STORAGE
4 /1 to 10/31 18 AF
Use: IRRIGATION STORAGE
1 /1 to 12/31 18 AF
Use: FIRE PROTECTION FROM STORAGE
01/01 to 12/31 2 AF
Total Diversion: 20 AF
Date Filed: 11-02-2022
Place Of Use: FIRE PROTECTION FROM STORAGE,FIRE PROTECTION STORAGE,IRRIGATION FROM STORAGE,IRRIGATION STORAGE
T57N R01W S2 SESW
Total Acres: 6

**96-12471**
STEVE ROOS
134 SUNNYSIDE RD
SANDPOINT, ID 83864
Point of Diversion SWNW
S4 T57N R01W
BONNER County
Source LAKE PEND OREILLE
Tributary PEND OREILLE RIVER
Use: IRRIGATION
4 /1 to 10/31
Total Diversion: 0.05 CFS
Date Filed: 08-26-2022
Place Of Use: IRRIGATION
T57N R01W S4 SWNW
Total Acres: 1.7

**96-[illegible]51**
GABE SELLERS
JENNIFER SELLERS
132 PINECONE ROAD
SANDPOINT, ID 83864
Point of Diversion L1(NWNW)
S7 T58N R01W
BONNER County
Source GROUND WATER
Use: DOMESTIC
1 /1 to 12/31 0.06 CFS
Use: IRRIGATION
04/1 to 10/31 0.2 CFS
Use: STOCKWATER
1 /1 to 12/31 0.02 CFS
Total Diversion: 0.2 CFS
Date Filed: 11-01-2022
Place Of Use: DOMESTIC, IRRIGATION,STOCKWATER
T58N R01W S7 L1(NWNW)
Total Acres: 15

**96-12836**
EMMETT JONES
60 JONES RD
SAGLE, ID 83860
Point of Diversion L1(SESW)
S19 T57N R01W
BONNER County
Source PEND OREILLE LAKE
Tributary PEND OREILLE RIVER
Use: DOMESTIC
4 /1 to 10/31
Total Diversion: 0.04 CFS
Date Filed: 09-29-2022
Place Of Use: DOMESTIC
T57N R01W S19 L1(SWSW),L1(SESW)
Place Of Use: DOMESTIC
T57N R01W S30 L4(NWNW),L3(NENW)

**96-12844**
BASCOM & TERRI PALMER TRUST
270 GROUSE CREEK CUTOFF
SANDPOINT, ID 83864
Point of Diversion SWNE
S2 T58N R01W
BONNER County
Source GROUND WATER
Point of Diversion SENW
S2 T58N R01W
BONNER County
Source GROUND WATER
Use: IRRIGATION
4 /1 to 10/31 0.2 CFS
Use: FIRE PROTECTION
1 /1 to 12/31 0.2 CFS
Use: DOMESTIC
1 /1 to 12/31 0.11 CFS
Use: STOCKWATER
1 /1 to 12/31 0.02 CFS
Total Diversion: 0.2 CFS
Date Filed: 10-28-2022
Place Of Use: DOMESTIC,FIRE PROTECTION,STOCKWATER
T58N R01W S2 L3(NENW),L2(NWNE), SWNE,SWNW,SENW
Place Of Use: IRRIGATION
T58N R01W S2 L3(NENW),SWNE,SENW
Total Acres: 11

**96-13203**
RODERICK H STANFORD
ROBERTA STANFORD
1751 WINDERMERE LOOP RD
WINDERMERE, BC VOB 2L2
Point of Diversion L2(SWNW)
S29 T56N R03W
BONNER County
Source PEND OREILLE RIVER
Tributary COLUMBIA RIVER
Use: IRRIGATION
04/01 to 10/31
Total Diversion: 0.03 CFS
Date Filed: 10-27-2022
Place Of Use: IRRIGATION
T56N R03W S29 L2(SWNW)
Total Acres: 0.8

**96-13348**
ROLEY SCHOONOVER
1413 UPPER GOLD CREEK RD
SANDPOINT, ID 83864
Point of Diversion SENESE
S6 T58N R01E
BONNER County
Source SPRING
Tributary GOLD CREEK
Use: DOMESTIC
1 /1 to 12/31
Total Diversion: 0.04 CFS
Date Filed: 10-31-2022
Place Of Use: DOMESTIC
T58N R01E S5 SWSW
Place Of Use: DOMESTIC
T58N R01E S6 SESE,NESE

**96-13384**
CARL PIETRON
PATRICIA PIETRON
2342 WRENCO LOOP
SANDPOINT, ID 83864
Point of Diversion NWSE
S29 T57N R03W
BONNER County
Source UNNAMED STREAM
Tributary JOHNSON CREEK
Use: IRRIGATION
04/01 to 10/31
Total Diversion: 0.15 CFS
Date Filed: 10-24-2022
Place Of Use: IRRIGATION
T57N R03W S29 NESE,NWSE
Total Acres: 5

**96-13387**
COLEGROVE TRUST
1392 LOWER PACK RIVER RD
SANDPOINT, ID 83864-8183
Point of Diversion SWNENW
S19 T59N R01W
BONNER County
Source SPRING
Tributary SINKS
Use: IRRIGATION
04/01 to 10/31
Total Diversion: 0.03 CFS
Date Filed: 10-24-2022
Place Of Use: IRRIGATION
T59N R01W S19 NENW
Total Acres: 1

**96-13414**
JOHN KEAN
SUSAN KEAN
PO BOX 1449
KIHEI, HI 96753-1449
Point of Diversion L1(NWNE)
S8 T57N R01W
BONNER County
Source LAKE PEND OREILLE
Tributary PEND OREILLE RIVER
Use: IRRIGATION
04/01 to 10/31
Total Diversion: 0.03 CFS
Date Filed: 10-24-2022
Place Of Use: IRRIGATION
T57N R01W S8 L1(NWNE)
Total Acres: 1

**96-13439**
MARK SAUTER
205 CEDAR RIDGE RD
SANDPOINT, ID 83864-9029
Point of Diversion SESW
S31 T56N R03W
BONNER County
Source HOODOO CREEK
Tributary PEND OREILLE RIVER
Use: DIVERSION TO STORAGE
01/01 to 12/31 0.2 CFS
Use: FIRE PROTECTION STORAGE
01/01 to 12/31 9.8 AF
Use: RECREATION STORAGE

SCANNED
MAR 0 1 2023

01/01 to 12/31 9.8 AF
Use: IRRIGATION STORAGE
01/01 to 12/31 27 AF
Use: IRRIGATION FROM STORAGE
04/01 to 10/31 27 AF
Total Diversion: 0.2 CFS, 36.8 AF
Date Filed: 10-25-2022
Place Of Use: DIVERSION TO STORAGE,FIRE PROTECTION STORAGE,IRRIGATION FROM STORAGE,IRRIGATION STORAGE,RECREATION STORAGE
T56N R03W S31 L5(SWSW)
Place Of Use: IRRIGATION FROM STORAGE
T56N R03W S31 L4(NWSW)
Total Acres: 9

**96-13441**
MARK SAUTER
205 CEDAR RIDGE RD
SANDPOINT, ID 83864-9029
Point of Diversion L5(SWSW)
S31 T56N R03W
BONNER County
Source GROUND WATER
Use: DOMESTIC
01/01 to 12/31 0.1 CFS
Use: STOCKWATER
01/01 to 12/31 0.02 CFS
Total Diversion: 0.12 CFS
Date Filed: 10-25-2022
Place Of Use: DOMESTIC,STOCKWATER
T56N R03W S31 L4(NWSW),L5(SWSW),SESW

**96-13476**
CHARLES R SWARTZ
4633 ELMIRA RD
SANDPOINT, ID 83864
Point of Diversion NWSE
S12 T59N R01W
BONNER County
Source SAND CREEK
Tributary PACK RIVER
Use: IRRIGATION
04/01 to 10/31
Total Diversion: 0.15 CFS
Date Filed: 10-27-2022
Place Of Use: IRRIGATION
T59N R01W S12 NWSE
Total Acres: 5

**96-13548**
THOMAS COMETTO
LORI COMETTO
PO BOX 665
PONDERAY, ID 83852-0665
Point of Diversion SENW
S24 T59N R01E
BONNER County
Source GROUSE CREEK
Tributary GROUSE CREEK
Use: FIRE PROTECTION
01/01 to 12/31 0.2 CFS
Use: IRRIGATION
04/01 to 10/31 0.06 CFS
Total Diversion: 0.2 CFS
Date Filed: 10-28-2022
Place Of Use: FIRE PROTECTION
T59N R01E S24
NENW,SENW
Place Of Use: IRRIGATION
T59N R01E S24 SENW
Total Acres: 2

**96-13575**
TERRY C BLOOM
PO BOX 74
KOOTENAI, ID 83840-0074
Point of Diversion SESW
S6 T57N R01W
BONNER County
Source BOYER SLOUGH
Tributary LAKE PEND OREILLE
Use: IRRIGATION
04/01 to 10/31
Total Diversion: 0.2 CFS
Date Filed: 10-28-2022
Place Of Use: IRRIGATION
T57N R01W S6 SESW
Total Acres: 4

**96-13582**
HONEY POT TRUST
PO BOX 3762
COEUR D ALENE, ID 83816-2530
Point of Diversion L3(SWNW)
S25 T57N R02W
BONNER County
Source LAKE PEND OREILLE
Tributary PEND OREILLE RIVER
Use: FIRE PROTECTION
01/01 to 12/31 0.2 CFS
Use: IRRIGATION
04/01 to 10/31 0.03 CFS
Total Diversion: 0.2 CFS
Date Filed: 11-01-2022
Place Of Use: FIRE PROTECTION,IRRIGATION
T57N R02W S25 L3(SWNW)
Total Acres: 0.6

**96-13590**
HEIDI R EARL
ROBERT M EARL
PO BOX 51
LACLEDE, ID 83841-0051
Point of Diversion NESW
S19 T56N R03W
BONNER County
Source RILEY CREEK
Tributary PEND OREILLE RIVER
Use: IRRIGATION
04/01 to 10/31 0.06 CFS
Use: STOCKWATER
01/01 to 12/31 0.02 CFS
Total Diversion: 0.08 CFS
Date Filed: 11-01-2022
Place Of Use: IRRIGATION,STOCKWATER
T56N R03W S19 NESW
Total Acres: 2

**96-13599**
CLIFFORD DAVIS
GINA DAVIS
145 HERITAGE LN
SANDPOINT, ID 83864-0706
Point of Diversion SENW
S9 T58N R01W
BONNER County
Source PACK RIVER
Tributary LAKE PEND OREILLE
Use: STOCKWATER
01/01 to 12/31 0.02 CFS
Use: IRRIGATION
04/01 to 10/31 0.2 CFS
Total Diversion: 0.2 CFS
Date Filed: 10-20-2022
Place Of Use: IRRIGATION,STOCKWATER
T58N R01W S9
SWNW,SENW
Total Acres: 13.3

**98-8103**
BEN AND PAULA DUNN
LIVING TRUST
PO BOX 1
COLBURN, ID 83865-0001
Point of Diversion NWNW
S10 T59N R01W
BONNER County
Source GROUND WATER
Use: DOMESTIC
01/01 to 12/31 0.04 CFS
Use: IRRIGATION
04/01 to 10/31 0.03 CFS
Total Diversion: 0.07 CFS
Date Filed: 10-24-2022
Place Of Use: DOMESTIC,IRRIGATION
T59N R01W S10
NENW,NWNW
Total Acres: 1

Permits will be subject to all prior water rights. For additional information concerning the property location, contact the Northern office at (208)762-2800; or for a full description of the right(s), please see https://idwr.idaho.gov/apps/ExtSearch/WRApplicationResults/. Protests may be submitted based on the criteria of Idaho Code § 42-203A. Any protest against the approval of this application must be filed with the Director, Dept. of Water Resources, Northern Region, 7600 N MINERAL DR STE 100, COEUR D ALENE ID 83815-7763 together with a protest fee of $25.00 for each application on or before 12/5/2022. The protestant must also send a copy of the protest to the applicant.
GARY SPACKMAN, Director
Legal#4690
AD#2518
November 17, 24, 2022

SCANNED
MAR 0 1 2023

# IDAHO DEPARTMENT OF WATER RESOURCES
# APPROPRIATION APPLICATION ANALYSIS SHEET

W.R. # 98 - 8103 APPLICATION ID # 87136 ENT. _____ BCA SO OK to Publish MR

INITIAL REVIEW

APPLICANT: BEN AND PAULA DUNN LIVING TRUST BY: lm DATE: 10 / 26 / 2022

| ITEM | REQUIRED INFORMATION |
|---|---|
| 1. | (✓) Name and Address |
| 2. | (✓) Source |
| 3. | (✓) Point of Diversion & County |
| 4. | (✓) Quantity |
| | (✓) Nature of Proposed Use |
| | (✓) Period of Use |
| 5. | (✓) Total Quantity |
| 6. | (✓) Description of diverting works |
| 7. | (✓) Time required for b/u |
| 8. | (✓) Proposed use |
| 9. | (✓) Place of use or acres irrigated |
| 10. | (✓) Other water Rights |
| 11. | (✓) Ownership |
| 12. | (✓) Map |
| | (✓) Signature |
| | (✓) Fee (Amt, receipt, acknowledgement) |

*** Send info sheet Y( ) N(✓)

## ADDITIONAL INFORMATION

(Yes)(No)

✓ ___ **Shape File Created** Date 10/26/22 By: lm

___ ___ Field check: by _____

___ ___ Field report attached

___ ___ Analysis Supp. attached(>5cfs/500af)

___ ___ Water delivered by water master? Water District # _____

## PROCESSING

(Yes)(No) **PRIORITY DATE:** 10 / ~~26~~ 24 / 2022

___ ✓ (Include Moratorium Remark)

___ ✓ Statewide Advertising: (Diversion rate greater than 10 cfs or 1,000 af).

**ADVERTISE IN:** BONNER County

Newspaper: Bonner County Daily Bee

Dates scheduled for publication 11-17-22 & 11-24-22

Affidavit of Publication received: 12-5-22

Dates actually published: 11-17-22 & 11-24-22

Application published correctly. Yes ✓ No ____

If not, action taken: _____

Final Date for Protest: December 5, 2022

Protests Received: Yes ____ No ✓

## LETTERS SENT REQUESTING:

( ) Dam Information ( ) Fish Information

( ) Power Information ( ) Other: _____

## INFORMATION RECEIVED:

( ) Dam Information ( ) Fish Information

( ) Power Information ( ) Other: _____

## GROUNDWATER SECTION

| WD Permit No.'s: | Tag # | Type: | | Fees | Receipt No. | Upgrade Needed? |
|---|---|---|---|---|---|---|
| _____ | _____ | Dom.___ | Non-Dom.___ | Paid $_____ | _____ | Y( ) N( ) |
| _____ | _____ | Dom.___ | Non-Dom.___ | Paid $_____ | _____ | Y( ) N( ) |
| _____ | _____ | Dom.___ | Non-Dom.___ | Paid $_____ | _____ | Y( ) N( ) |

___ ___ Groundwater management area

___ ___ Critical ground water area

___ ___ Well Drilling Permit required

___ ___ Well Drilling Application and Fees received

___ ___ Well Drilling Application approved?

Sand Point well (Groundwater) No receipt record.

Remarks: _____

## FINAL REGIONAL PROCESSING/REVIEW

(Yes)(No)

___ ___ Notice of pending void order issued.

___ ___ Further information required from applicant _____

Final order response date: ____/____/____

___ ___ Measuring device required

___ ___ Measuring port required

___ ___ Special conditions: _____

___ ___ Special conditions of approval supplement and/or cover letter attached: _____

Approval Recommended by: lm Date: 02 / 16 / 2023 Sr. Agent initial JB Interim Supervisor

IDAHO DEPARTMENT OF
WATER RESOURCES

Northern Region • 7600 N Mineral Drive, Suite 100 • Coeur D'Alene, ID 83815-7763
Phone: 208-762-2800 • Fax: 208-762-2819 • Email: northerninfo@idwr.idaho.gov • Web: idwr.idaho.gov

Governor Brad Little

Director Gary Spackman

November 8, 2022

BEN AND PAULA DUNN LIVING TRUST
PO BOX 1
COLBURN, ID 83865-0001

RE: Application for Permit No. 98-8103

Dear Applicant(s):

The Department of Water Resources has received your water right application. Please refer to the number referenced above in all future correspondence regarding this application.

A legal notice of the application has been prepared and is scheduled for publication in the BONNER COUNTY DAILY BEE on 11/17/2022 and 11/24/2022. Protests to this application may be submitted for a period ending ten (10) days after the second publication.

If the application is protested, you will be sent a copy of each protest. All protests must be resolved before the application can be considered for approval. If the protest(s) cannot be resolved voluntarily, the Department will conduct a conference and/or hearing on the matter.

If the application is not protested, the Department will process your application and notify you of any action taken on the application. If your application is approved, the Department will send you a copy of the permit.

Please contact this office if you have any questions regarding the application.

Sincerely,

Tammy Alleman
Administrative Assistant

SCANNED

## Alleman, Tammy

**From:** Alleman, Tammy
**Sent:** Tuesday, November 8, 2022 12:09 PM
**To:** bcdblegals@cdapress.com
**Subject:** Legal Notice for BCDB
**Attachments:** Legal Notice for BCDB.docx

Please publish the enclosed legal notice in the **Bonner County Daily Bee** on the dates indicated **November 17th & November 24th, 2022** (once a week for two consecutive weekly issues). If you cannot publish the notice on the proposed dates, please contact us immediately.

**Please send a proof once you have the article ready for print for our review.**

An affidavit of publication must be submitted to the Department along with the publication bill. Please send the affidavit and bill to this office before **December 5, 2022.** Your cooperation is appreciated.

Sincerely,

IDAHO DEPARTMENT OF WATER RESOURCES

**Tammy Alleman | Administrative Assistant**
**Idaho Department of Water Resources**
Northern Regional Office
7600 N Mineral Drive, Suite 100
Coeur d'Alene, ID 83815-7763
Phone: (208) 762-2800

The following application(s) have been filed to appropriate the public waters of the State of Idaho:

**96-10785**
DILLON BLOOMER
ROGER BLOOMER
240 SHALOM CT
CLARK FORK, ID 83811-7809
Point of Diversion SENWSW
S20 T55N R03E
BONNER County
Source SPRING
Tributary SINKS
Use: DOMESTIC
1 /1 to 12/31
Total Diversion: 0.04 CFS
Date Filed: 11-01-2022
Place Of Use: DOMESTIC
T55N R03E S20 NWSW

**96-12257**
SUSAN FAIRCLOUGH
4858 BERNAL AVE
PLEASANTON, CA 94566-1155
Point of Diversion SWNESW
S6 T56N R02E
BONNER County
Source SPRING
Tributary CARTER CREEK
Use: DOMESTIC
1 /1 to 12/31
Total Diversion: 0.04 CFS
Date Filed: 10-14-2022
Place Of Use: DOMESTIC
T56N R02E S6 NESW

**96-12384**
MARTIN HOYE
8459 SUNNYSIDE RD
SANDPOINT, ID 83864-6664
Point of Diversion NESESW
S2 T57N R01W
BONNER County
Source SPRING
Tributary LAKE PEND OREILLE
Use: FIRE PROTECTION STORAGE
1 /1 to 12/31 2 AF
Use: IRRIGATION FROM STORAGE
4 /1 to 10/31 18 AF
Use: IRRIGATION STORAGE
1 /1 to 12/31 18 AF
Use: FIRE PROTECTION FROM STORAGE
01/01 to 12/31 2 AF
Total Diversion: 20 AF
Date Filed: 11-02-2022
Place Of Use: FIRE PROTECTION FROM STORAGE,FIRE PROTECTION STORAGE,IRRIGATION FROM STORAGE,IRRIGATION STORAGE
T57N R01W S2 SESW
Total Acres: 6

96-12471
STEVE ROOS
134 SUNNYSIDE RD
SANDPOINT, ID 83864
Point of Diversion SWNW
S4 T57N R01W
BONNER County
Source LAKE PEND OREILLE
Tributary PEND OREILLE RIVER
Use: IRRIGATION
4 /1 to 10/31
Total Diversion: 0.05 CFS
Date Filed: 08-26-2022
Place Of Use: IRRIGATION
T57N R01W S4 SWNW
Total Acres: 1.7

**96-12551**
GABE SELLERS
JENNIFER SELLERS
132 PINECONE ROAD

SCANNED
NOV 10 2022

SANDPOINT, ID 83864
Point of Diversion L1(NWNW)
S7 T58N R01W
BONNER County
Source GROUND WATER
Use: DOMESTIC
1 /1 to 12/31 0.06 CFS
Use: IRRIGATION
04/1 to 10/31 0.2 CFS
Use: STOCKWATER
1 /1 to 12/31 0.02 CFS
Total Diversion: 0.2 CFS
Date Filed: 11-01-2022
Place Of Use: DOMESTIC,IRRIGATION,STOCKWATER
T58N R01W S7 L1(NWNW)
Total Acres: 15

**96-12836**
EMMETT JONES
60 JONES RD
SAGLE, ID 83860
Point of Diversion L1(SESW)
S19 T57N R01W
BONNER County
Source PEND OREILLE LAKE
Tributary PEND OREILLE RIVER
Use: DOMESTIC
4 /1 to 10/31
Total Diversion: 0.04 CFS
Date Filed: 09-29-2022
Place Of Use: DOMESTIC
T57N R01W S19
L1(SWSW),L1(SESW)
Place Of Use: DOMESTIC
T57N R01W S30
L4(NWNW),L3(NENW)

**96-12844**
BASCOM & TERRI PALMER TRUST
270 GROUSE CREEK CUTOFF
SANDPOINT, ID 83864
Point of Diversion SWNE
S2 T58N R01W
BONNER County
Source GROUND WATER
Point of Diversion SENW
S2 T58N R01W
BONNER County
Source GROUND WATER
Use: IRRIGATION
4 /1 to 10/31 0.2 CFS
Use: FIRE PROTECTION
1 /1 to 12/31 0.2 CFS
Use: DOMESTIC
1 /1 to 12/31 0.11 CFS
Use: STOCKWATER
1 /1 to 12/31 0.02 CFS
Total Diversion: 0.2 CFS
Date Filed: 10-28-2022
Place Of Use: DOMESTIC,FIRE PROTECTION,STOCKWATER
T58N R01W S2
L3(NENW),L2(NWNE),
SWNE,SWNW,SENW
Place Of Use: IRRIGATION
T58N R01W S2
L3(NENW),SWNE,SENW
Total Acres: 11

**96-13203**
RODERICK H STANFORD
ROBERTA STANFORD
1751 WINDERMERE LOOP RD
WINDERMERE, BC VOB 2L2
Point of Diversion L2(SWNW)
S29 T56N R03W
BONNER County
Source PEND OREILLE RIVER
Tributary COLUMBIA RIVER

Use: IRRIGATION
04/01 to 10/31
Total Diversion: 0.03 CFS
Date Filed: 10-27-2022
Place Of Use: IRRIGATION
T56N R03W S29 L2(SWNW)
Total Acres: 0.8

**96-13348**
ROLEY SCHOONOVER
1413 UPPER GOLD CREEK RD
SANDPOINT, ID 83864
Point of Diversion SENESE
S6 T58N R01E
BONNER County
Source SPRING
Tributary GOLD CREEK
Use: DOMESTIC
1 /1 to 12/31
Total Diversion: 0.04 CFS
Date Filed: 10-31-2022
Place Of Use: DOMESTIC
T58N R01E S5 SWSW
Place Of Use: DOMESTIC
T58N R01E S6
SESE,NESE

**96-13384**
CARL PIETRON
PATRICIA PIETRON
2342 WRENCO LOOP
SANDPOINT, ID 83864
Point of Diversion NWSE
S29 T57N R03W
BONNER County
Source UNNAMED STREAM
Tributary JOHNSON CREEK
Use: IRRIGATION
04/01 to 10/31
Total Diversion: 0.15 CFS
Date Filed: 10-24-2022
Place Of Use: IRRIGATION
T57N R03W S29
NESE,NWSE
Total Acres: 5

**96-13387**
COLEGROVE TRUST
1392 LOWER PACK RIVER RD
SANDPOINT, ID 83864-8183
Point of Diversion SWNENW
S19 T59N R01W
BONNER County
Source SPRING
Tributary SINKS
Use: IRRIGATION
04/01 to 10/31
Total Diversion: 0.03 CFS
Date Filed: 10-24-2022
Place Of Use: IRRIGATION
T59N R01W S19 NENW
Total Acres: 1

**96-13414**
JOHN KEAN
SUSAN KEAN
PO BOX 1449
KIHEI, HI 96753-1449
Point of Diversion L1(NWNE)
S8 T57N R01W
BONNER County
Source LAKE PEND OREILLE
Tributary PEND OREILLE RIVER
Use: IRRIGATION
04/01 to 10/31
Total Diversion: 0.03 CFS
Date Filed: 10-24-2022
Place Of Use: IRRIGATION

SCANNED
NOV 1 8 2022

T57N R01W S8 L1(NWNE)
Total Acres: 1

**96-13439**
MARK SAUTER
205 CEDAR RIDGE RD
SANDPOINT, ID 83864-9029
Point of Diversion SESW
S31 T56N R03W
BONNER County
Source HOODOO CREEK
Tributary PEND OREILLE RIVER
Use: DIVERSION TO STORAGE
01/01 to 12/31 0.2 CFS
Use: FIRE PROTECTION STORAGE
01/01 to 12/31 9.8 AF
Use: RECREATION STORAGE
01/01 to 12/31 9.8 AF
Use: IRRIGATION STORAGE
01/01 to 12/31 27 AF
Use: IRRIGATION FROM STORAGE
04/01 to 10/31 27 AF
Total Diversion: 0.2 CFS, 36.8 AF
Date Filed: 10-25-2022
Place Of Use: DIVERSION TO STORAGE,FIRE PROTECTION STORAGE,IRRIGATION FROM STORAGE,IRRIGATION STORAGE,RECREATION STORAGE
T56N R03W S31 L5(SWSW)
Place Of Use: IRRIGATION FROM STORAGE
T56N R03W S31 L4(NWSW)
Total Acres: 9

**96-13441**
MARK SAUTER
205 CEDAR RIDGE RD
SANDPOINT, ID 83864-9029
Point of Diversion L5(SWSW)
S31 T56N R03W
BONNER County
Source GROUND WATER
Use: DOMESTIC
01/01 to 12/31 0.1 CFS
Use: STOCKWATER
01/01 to 12/31 0.02 CFS
Total Diversion: 0.12 CFS
Date Filed: 10-25-2022
Place Of Use: DOMESTIC,STOCKWATER
T56N R03W S31
L4(NWSW),L5(SWSW),SESW

**96-13476**
CHARLES R SWARTZ
4633 ELMIRA RD
SANDPOINT, ID 83864
Point of Diversion NWSE
S12 T59N R01W
BONNER County
Source SAND CREEK
Tributary PACK RIVER
Use: IRRIGATION
04/01 to 10/31
Total Diversion: 0.15 CFS
Date Filed: 10-27-2022
Place Of Use: IRRIGATION
T59N R01W S12 NWSE
Total Acres: 5

**96-13548**
THOMAS COMETTO
LORI COMETTO
PO BOX 665
PONDERAY, ID 83852-0665
Point of Diversion SENW
S24 T59N R01E
BONNER County
Source GROUSE CREEK
Tributary GROUSE CREEK
Use: FIRE PROTECTION
01/01 to 12/31 0.2 CFS

COAUMED
NOV 08 2022

Use: IRRIGATION
04/01 to 10/31 0.06 CFS
Total Diversion: 0.2 CFS
Date Filed: 10-28-2022
Place Of Use: FIRE PROTECTION
T59N R01E S24
NENW,SENW
Place Of Use: IRRIGATION
T59N R01E S24 SENW
Total Acres: 2

**96-13575**
TERRY C BLOOM
PO BOX 74
KOOTENAI, ID 83840-0074
Point of Diversion SESW
S6 T57N R01W
BONNER County
Source BOYER SLOUGH
Tributary LAKE PEND OREILLE
Use: IRRIGATION
04/01 to 10/31
Total Diversion: 0.2 CFS
Date Filed: 10-28-2022
Place Of Use: IRRIGATION
T57N R01W S6 SESW
Total Acres: 4

**96-13582**
HONEY POT TRUST
PO BOX 3762
COEUR D ALENE, ID 83816-2530
Point of Diversion L3(SWNW)
S25 T57N R02W
BONNER County
Source LAKE PEND OREILLE
Tributary PEND OREILLE RIVER
Use: FIRE PROTECTION
01/01 to 12/31 0.2 CFS
Use: IRRIGATION
04/01 to 10/31 0.03 CFS
Total Diversion: 0.2 CFS
Date Filed: 11-01-2022
Place Of Use: FIRE PROTECTION,IRRIGATION
T57N R02W S25 L3(SWNW)
Total Acres: 0.6

**96-13590**
HEIDI R EARL
ROBERT M EARL
PO BOX 51
LACLEDE, ID 83841-0051
Point of Diversion NESW
S19 T56N R03W
BONNER County
Source RILEY CREEK
Tributary PEND OREILLE RIVER
Use: IRRIGATION
04/01 to 10/31 0.06 CFS
Use: STOCKWATER
01/01 to 12/31 0.02 CFS
Total Diversion: 0.08 CFS
Date Filed: 11-01-2022
Place Of Use: IRRIGATION,STOCKWATER
T56N R03W S19 NESW
Total Acres: 2

**96-13599**
CLIFFORD DAVIS
GINA DAVIS
145 HERITAGE LN
SANDPOINT, ID 83864-0706
Point of Diversion SENW
S9 T58N R01W
BONNER County
Source PACK RIVER
Tributary LAKE PEND OREILLE
Use: STOCKWATER

SCANNED
NOV 08 2022

01/01 to 12/31 0.02 CFS
Use: IRRIGATION
04/01 to 10/31 0.2 CFS
Total Diversion: 0.2 CFS
Date Filed: 10-20-2022
Place Of Use: IRRIGATION,STOCKWATER
T58N R01W S9
SWNW,SENW
Total Acres: 13.3

**98-8103**
BEN AND PAULA DUNN LIVING TRUST
PO BOX 1
COLBURN, ID 83865-0001
Point of Diversion NWNW
S10 T59N R01W
BONNER County
Source GROUND WATER
Use: DOMESTIC
01/01 to 12/31 0.04 CFS
Use: IRRIGATION
04/01 to 10/31 0.03 CFS
Total Diversion: 0.07 CFS
Date Filed: 10-24-2022
Place Of Use: DOMESTIC,IRRIGATION
T59N R01W S10
NENW,NWNW
Total Acres: 1

Permits will be subject to all prior water rights. For additional information concerning the property location, contact the Northern office at (208)762-2800; or for a full description of the right(s), please see https://idwr.idaho.gov/apps/ExtSearch/WRApplicationResults/. Protests may be submitted based on the criteria of Idaho Code § 42-203A. Any protest against the approval of this application must be filed with the Director, Dept. of Water Resources, Northern Region, 7600 N MINERAL DR STE 100, COEUR D ALENE ID 83815-7763 together with a protest fee of $25.00 for each application on or before 12/5/2022. The protestant must also send a copy of the protest to the applicant.
GARY SPACKMAN, Director Published on 11/17/2022 and 11/24/2022

SCANNED

## Maxey, Shaun

**From:** Maxey, Shaun
**Sent:** Wednesday, October 5, 2022 10:49 AM
**To:** 'deb3414jd@yahoo.com'
**Subject:** Stockwater use and map for Application for Permit (Dunn Living Trust)
**Attachments:** 96-XXXX DUNN LIVING TRUST APP.pdf; 96-XXXX DUNN LIVING TRUST sub MAP.pdf; 96-XXXX DUNN LIVING TRUST MAP.pdf

Mr. or Mrs. Dunn:

Please contact me at (208) 762.2816 about your intent for Stockwater use and the map shown on your Application For Permit for property located at 339 Noogie Lane. Line 5 of the Application has 0.02 CFS shown for Stockwater use but '...50 Head Mixed Stock...' is crossed out and there is no Stockwater use indicated in the grid on Line 9. I have attached a copy of your Application and a substitute map to this e-mail.

Please make the corrections to the Application, as we discussed via phone, on Line 9 with the incorrect information crossed out and your initials and date for making each correction. Please also indicate if you want the substitute map that I prepared showing the Place Of Use tax lots with a red/orange boundary to be added to the Application. You can submit the corrections, via U.S. mail to the address shown below, or via e-mail to the following address: file@idwr.idaho.gov

Thanks,

Shaun Maxey

IDAHO DEPARTMENT OF WATER RESOURCES

**Shaun M. Maxey | Sr. Water Resource Agent**
**Idaho Department of Water Resources**
Northern Regional Office
7600 N Mineral Drive, Suite 100
Coeur d'Alene, ID 83815-7763
Phone: (208) 762-2800

SCANNED
NOV 08 2022

# Idaho Department of Water Resources Receipt

**Receipt ID: C117437**

| | | | | | |
|---|---|---|---|---|---|
| Payment Amount | $50.00 | Date Received | 11/30/2023 | Region | STATE |
| Payment Type | Check | Check Number | 2039 | | |
| Payer | DUNN, P.N. | | | | |
| Comments | STATEMENT OF COMPLETION FOR SUBMITTING PROOF OF BENEFICIAL USE<br>PERMIT # 98-8103<br>FOR: BEN AND PAULA DUNN LIVING TRUST | | | | |

**Fee Details**

| Amount | Description | PCA | Fund | Fund Detail | Subsidiary | Object |
|---|---|---|---|---|---|---|
| $50.00 | BENEFICIAL USE | 56104 | 0229 | 21 | | 1155 |

KM

Signature Line (Department Representative)