RECEIVED
JUL 15 1976
Department of Water Resources
Eastern District Office

AFFIDAVIT of PUBLICATION

County of Bingham)
) ss.
State of Idaho)

I, David Mark Brown do solemnly swear that I am the Publisher of The Blackfoot News which is a daily newspaper of general circulation published each day except Sunday at Blackfoot, Bingham County, Idaho, said newspaper having been so published at Blackfoot, aforesaid for more than one year past; that said newspaper heretofore complied with all the provisions of Chapter 154 of the Sessions Laws of Idaho of 1933, approved March 11, 1933, and duly designated, pursuant to law, a particular day of the week as the day on which legal notices required by law or by the order of any Court of competent jurisdiction within the State of Idaho shall be published to-wit: Thurs of each week; that the notice attached hereto and which is a part of this affidavit and part of the proof of publication was, published in said Thursday issue of said newspaper 2 consecutive weeks, the first publication having been made on the 24th day of June, 19 76, and the last publication having been made on the 1st day of July, 19 76; that said notice was published in the regular and entire issue of every number of the paper as aforesaid during the period and time of publication, and that notice was published in the newspaper and not in a supplement.

David M. Brown

Subscribed and sworn to before me this 13th day of July, 19 76

Patricia H. Johnson
Notary Public for the State of Idaho,
Residing at Blackfoot, Idaho
My commission expires
Oct. 20, 1976

NOTICE OF APPLICATION FOR WATER PERMIT

Notice is hereby given that Juan A. Irigoyen, Aberdeen, Idaho has on 6-14-76 submitted Application No. 35-7618 for a permit to appropriate 1.60 cubic feet per second of water from a ground-water source by means of well and pump within the SW¼SE¼, Sec. 26, T. 5S, R. 31E, B.M., Bingham County; to be used from Apr. 1 to Nov. 1 for the irrigation of 80 acres within the W½SE¼, Sec. 26, T. 5S, R. 31E, B.M.

If issued, this permit will be subject to all prior water rights. Protests against the granting of the permit must be filed with the Idaho Department of Water Resources, 1515 Lincoln Road, Idaho Falls, Idaho, 83401 on or before July 12, 1976.

R. KEITH HIGGINSON
Director
(4731)
Pub.: 6 24; 7-1

31

MICROFILMED

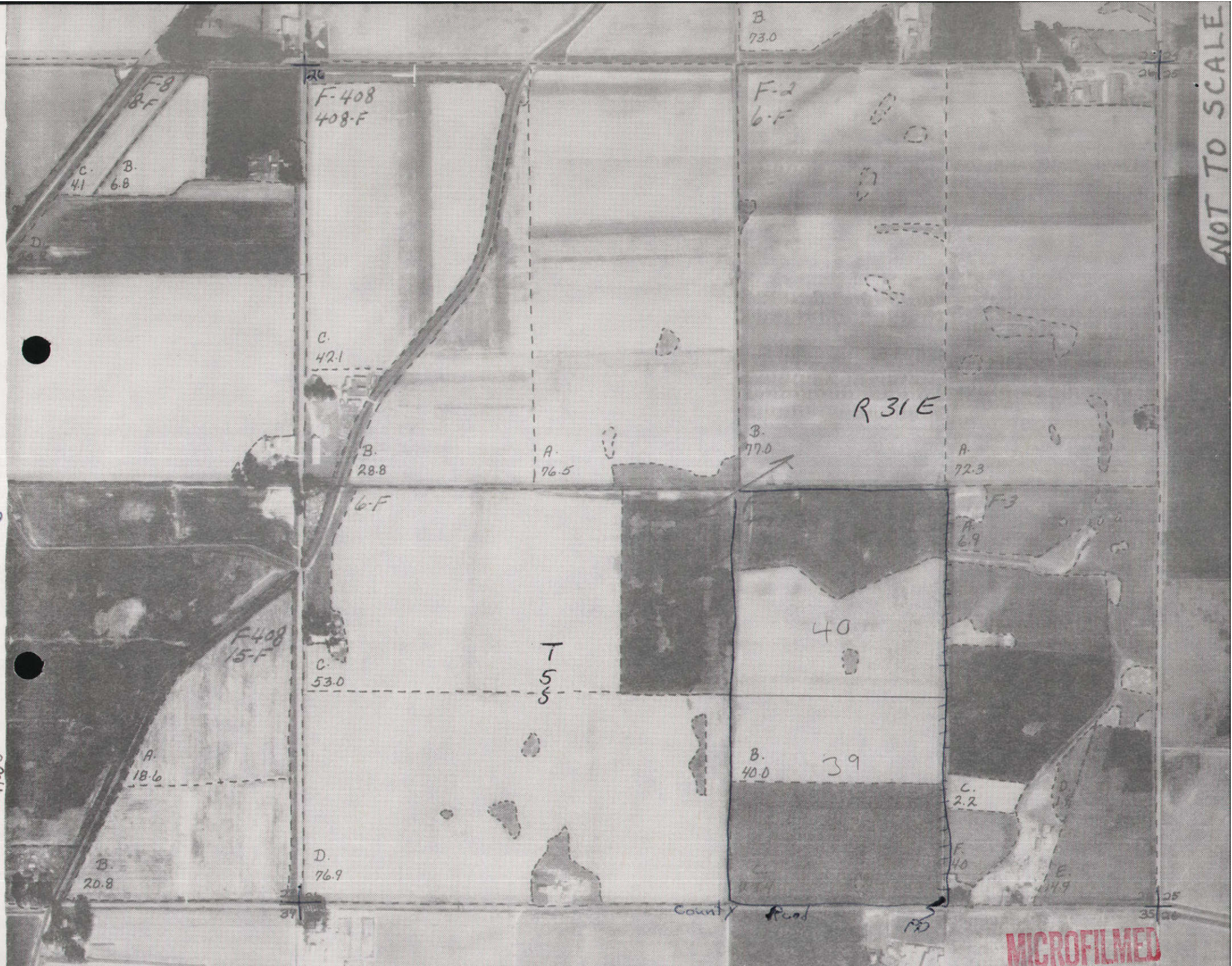
NOT TO SCALE
B.
73.0
26
F-408
408-F
F-2
6-F
F-8
8-F
C.
41
B.
6.8
D.
C.
42.1
R 31 E
B.
28.8
A.
76.5
B.
77.0
A.
72.3
6-F
F-3
A.
6.9
40
F-408
15-F
T
5
S
C.
53.0
A.
18.6
B.
40.0
39
C.
2.2
D.
76.9
B.
20.8
F.
4.0
E.
14.9
37
County Road
35
25
35-7618
Hurt
MICROFILMED

State of Idaho

Department of Water Resources

WATER RIGHT LICENSE

License of Water Right No. 35-7618 Priority June 14, 1976 Amount 1.48 cfs

THIS IS TO CERTIFY, that Juan A. Irigoyen

of Aberdeen, Idaho, has complied with the terms and conditions of Permit No. 35-7618 issued pursuant to Application for Permit dated June 14, 1976, and has submitted proof to the Department of Water Resources on May 18, 1981, that he has applied water to a beneficial use, an examination by the Department indicates that the works have a capacity for the diversion of 1.48 cfs of water from a groundwater source, tributary to _____, and that the permit holder has applied to a beneficial use and established a right to use water as follows

Beneficial Use	Period of Use		Rate of Diversion	Annual Volume
Irrigation	from April 1	to November 1	at 1.48 cfs and	276.5 acre feet
	from	to	at cfs and	
	from	to	at cfs and	

(both dates inclusive)

Subject, however, to the condition that no more than 1.48 cfs of water be diverted at any one time, and that the amount of water so diverted and to which such right is entitled and confirmed is for the purpose aforementioned and is limited to the amount which can actually be beneficially used and shall not exceed 276.5 acre feet per year, said waters to be diverted within the SW¼SE¼, Section 26, Twp. 5S, Rge. 31E in the County of Bingham

Description and location of place of use:

Twp.	Range	Sec	NE¼				NW¼				SW¼				SE¼				Totals
			NE¼	NW¼	SW¼	SE¼	NE¼	NW¼	SW¼	SE¼	NE¼	NW¼	SW¼	SE¼	NE¼	NW¼	SW¼	SE¼	
5S	31E	26														40	39		79

Total number of acres irrigated 79

NOTE: Modifications to or variance from this license must be made within the limits of Section 42-222, Idaho Code, or the applicable Idaho Law. This right may be forfeited by five years of non-use.

The right to the use of the water hereby confirmed is restricted and appurtenant to the lands or place of use herein described, as provided by the laws of Idaho.

Witness the seal and signature of the Director, affixed at Boise, Idaho, this 26th day of February, 19 82.

Norman C. Young

For the Director

BEFORE THE DEPARTMENT OF WATER RESOURCES

OF THE

STATE OF IDAHO

IN THE MATTER OF CHANGING THE MEASURING DEVICE REQUIREMENT FOR PERMIT NO. 35-7618	ORDER

WHEREAS, the above numbered permit was approved with the condition that a measuring device of a type approved by the Department be permanently installed and maintained as part of the diverting works; and,

WHEREAS, on July 1, 1978, the Department adopted a new water measurement condition which states: "An access port or other device as specified by the Department shall be installed by the permit holder to provide for the installation of measuring equipment and the determination of the rate of diversion by the Department"; and,

WHEREAS, the former condition required the permit holder to purchase and install a measuring device or hire a professional engineer to certify the rate of diversion; and,

WHEREAS, the measuring device condition effective July 1, 1978, requires less capital expenditure by the permit holder; and,

WHEREAS, to be equitable to holders of permits issued prior to July 1, 1978, the new condition should be retroactive;

NOW THEREFORE, it is hereby ordered that the condition of approval of this permit related to water measurement is hereby changed as follows: "The permit holder shall either install a measuring device or provide a certified measurement by a professional engineer or install an access port or other device as specified by the Department".

Dated this 18th day of August, 1978.

C. STEPHEN ALLRED
Director

MICROFILMED

35 7618

Identification No. _____

Application No. _____

STATE OF IDAHO
DEPARTMENT OF WATER RESOURCES
APPLICATION FOR PERMIT

APPROVED

To Appropriate the Public Waters of the State of Idaho

(TYPE OR PRINT IN INK)

1. Name of applicant Juan A. Irigoyen Phone: 397-4722

   post office address RFD, Aberdeen, 83210

2. Source of water supply groundwater which is a tributary of _____

3. a. Location of point of diversion is SW ¼ of SE ¼ of Section 26 Township 5S

   Range 31E B.M. Bingham County; additional points of diversion if any: _____

   b. If water is not consumed, it will be discharged into _____ at a point in _____ ¼

   of _____ ¼ of Section _____ Township _____ Range _____ B.M. _____

4 Water will be used for the following purposes:

   Amount 1.60 (cfs or acre-feet per annum) for irrigation purpose from Apr. 1 to Nov. 1 (both dates inclusive)

   Amount _____ (cfs or acre-feet per annum) for _____ purpose from _____ to _____ (both dates inclusive)

   Amount _____ (cfs or acre-feet per annum) for _____ purpose from _____ to _____ (both dates inclusive)

5. Total quantity to be appropriated:

   a. 1.60 cubic feet per second and/or

   b. _____ acre feet per annum.

6. Proposed diverting works:

   a. Description of ditches, flumes, pumps, headgates, etc. well, pump and sprinkler system

   b. Height of storage dam _____ feet, active reservoir capacity _____ acre feet; total reservoir capacity _____ acre feet, materials used in storage dam: _____

   Period of year during which storage will occur _____ (Mo. Day) to _____ (Mo. Day) inclusive.

   c. Proposed well diameter is _____ inches; proposed depth of well is _____ feet

7 a Time required for the completion of the works and application of the water to the proposed beneficial use is 5 years

   b Estimated construction cost is $ 27,000.00 .

8 Description of proposed uses.

   a If water is **not** for irrigation.

   (1) Give the place of use of water. _____ ¼ of _____ ¼ of Section _____ Township _____

   Range _____ B.M.

   (2) Amount of power to be generated. _____ hp under _____ feet of head

   (3) List number of each kind of livestock to be watered _____

   (4) Name of municipality to be served _____, or number of families to be supplied with domestic water _____

   (5) If water is to be used for other purposes describe. _____

b. If water is for irrigation, indicate acreage in each subdivision in the tabulation below

TWP	RANGE	SEC	NE¼				NW¼				SW¼				SE¼				TOTALS
			NE¼	NW¼	SW¼	SE¼	NE¼	NW¼	SW¼	SE¼	NE¼	NW¼	SW¼	SE¼	NE¼	NW¼	SW¼	SE¼	
5S	31E	26														40	40		80

Total number of acres to be irrigated 80

c. Describe any other water rights used for the same purposes as described above. None

9. a. Who owns the property at the point of diversion Applicant

b. Who owns the land to be irrigated or place of use Applicant

c. If the property is owned by a person other than the applicant, describe the arrangement enabling the applicant to make this filing

10. Remarks

11. Map of proposed project· show clearly the proposed point of diversion, place of use, section number, township and range number.

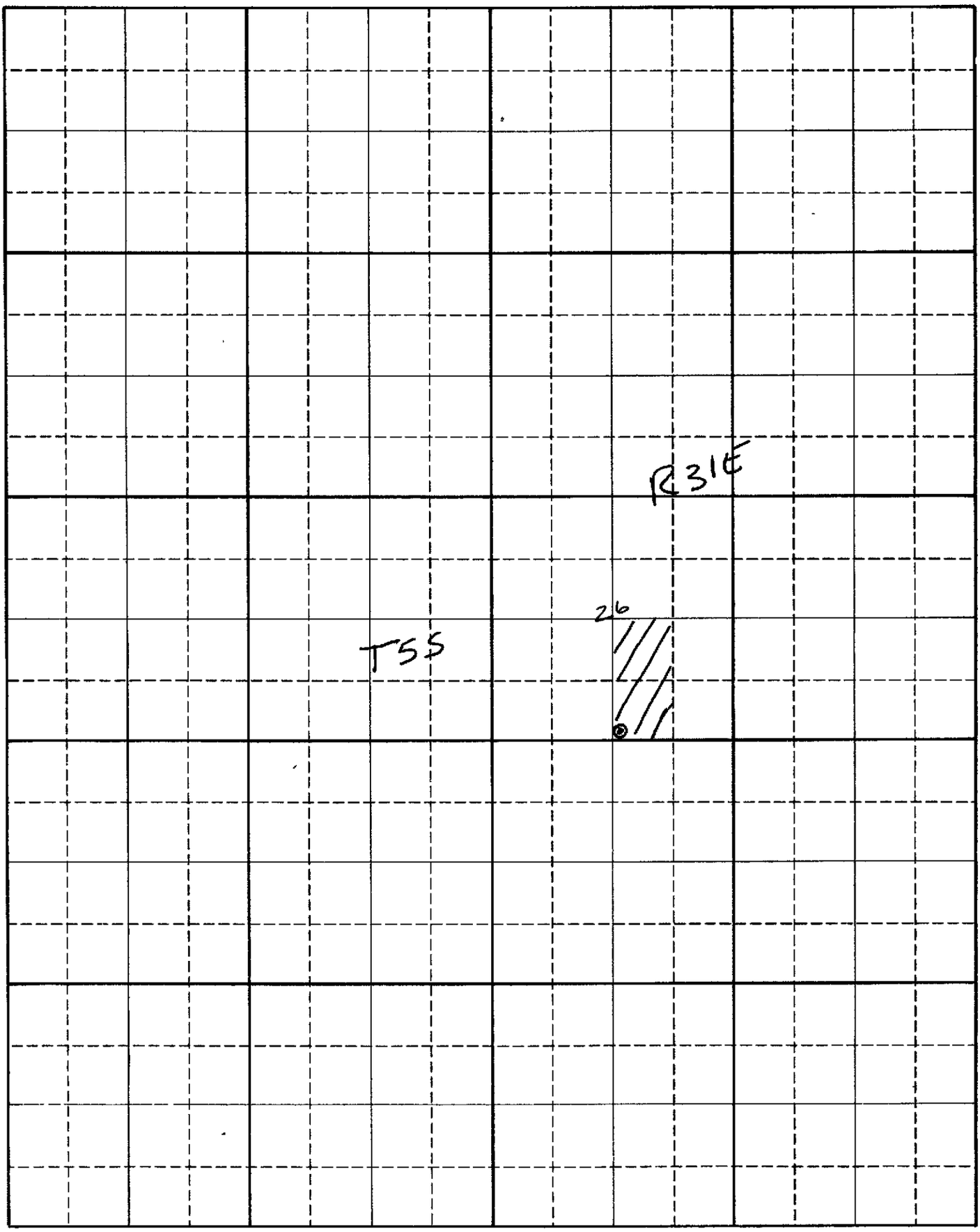

Scale. 2 inches equal 1 mile

BE IT KNOWN that the undersigned hereby makes application for permit to appropriate the public waters of the State of Idaho as herein set forth.

Juan A. Trigueyen
(Applicant)

Proposed Priority 6-14-76

Received by me Date 6-14-76 Time 11:43 a.

Preliminary check by BR Fee $ 35.00

Receipted by lw Date 6-14-76 #2433

Publication prepared by lw Date 6-17-76

Published in Blackfoot News

Publication dates June 24 & July 1, 1976

Publication approved me Date 7-15-76

Priority reduced to _____ Reason _____

Protests filed by: _____

Copies of protests forwarded by _____

Hearing held by _____ Date _____

Recommended for (approval) denial by DRT

ACTION OF THE DIRECTOR, DEPARTMENT OF WATER RESOURCES

This is to certify that I have examined Application for Permit to appropriate the public waters of the State of Idaho No. 35-7618, and said application is hereby APPROVED.

1. Approval of said application is subject to the following limitations and conditions:

   a. SUBJECT TO ALL PRIOR WATER RIGHTS.

   b. Proof of construction of works and application of water to beneficial use shall be submitted on or before July 1, 19 81.

   c. Other: A measuring device of a type approved by the Director shall be permanently installed and maintained as part of the diverting works.

2. Denial of said application is for the following reasons: _____

Witness my hand this 23 day of July 19 76.

Director

RECEIVED

JUL 15 1976

Department of Water Resources
Eastern District Office

AFFIDAVIT of PUBLICATION

County of Bingham)
) ss.
State of Idaho)

I, David Mark Brown do solemnly swear that I am the Publisher of The Blackfoot News which is a daily newspaper of general circulation published each day except Sunday at Blackfoot, Bingham County, Idaho, said newspaper having been so published at Blackfoot, aforesaid for more than one year past; that said newspaper heretofore complied with all the provisions of Chapter 154 of the Sessions Laws of Idaho of 1933, approved March 11, 1933, and duly designated, pursuant to law, a particular day of the week as the day on which legal notices required by law or by the order of any Court of competent jurisdiction within the State of Idaho shall be published to-wit: Thurs of each week; that the notice attached hereto and which is a part of this affidavit and part of the proof of publication was, published in said Thursday issue of said newspaper 2 consecutive weeks, the first publication having been made on the 24th day of June, 19 76, and the last publication having been made on the 1st day of July, 19 76; that said notice was published in the regular and entire issue of every number of the paper as aforesaid during the period and time of publication, and that notice was published in the newspaper and not in a supplement.

Subscribed and sworn to before me this 13th day of July, 19 76.

Patricia H. Johnson
Notary Public for the State of Idaho,
Residing at Blackfoot, Idaho
My commission expires
Oct. 20, 1976

NOTICE OF APPLICATION FOR WATER PERMIT

Notice is hereby given that Juan A. Irigoyen, Aberdeen, Idaho has on 6-14-76 submitted Application No. 35-7618 for a permit to appropriate 1.60 cubic feet per second of water from a ground-water source by means of well and pump within the SW¼SE¼, Sec. 26, T. 5S, R. 31E, B.M., Bingham County; to be used from Apr. 1 to Nov. 1 for the irrigation of 80 acres within the W½SE¼, Sec. 26, T. 5S, R. 31E, B.M.

If issued, this permit will be subject to all prior water rights. Protests against the granting of the permit must be filed with the Idaho Department of Water Resources, 1515 Lincoln Road, Idaho Falls, Idaho, 83401 on or before July 12, 1976.

R KEITH HIGGINSON
Director
(4731)
Pub. 6 24; 7-1 31

March 5, 1982

RE: Permit No. 35-7618

Juan A. Irigoyen
Aberdeen,
Idaho 83210

Dear Mr. Irigoyen:

Enclosed herewith is a copy of the Water Right License issued on the above referenced Permit.

Sincerely,

Jim Johnson

JIM JOHNSON
Water Distribution Supervisor

JJ:kw
Enclosure

MICROFILMED

State of Idaho
DEPARTMENT OF WATER RESOURCES
STATE OFFICE, 450 W. State Street, Boise, Idaho

JOHN V. EVANS
Governor

C. STEPHEN ALLRED
Director

Mailing address:
Statehouse
Boise, Idaho 83720
(208) 334-4440

February 9, 1982

Juan A. Irigoyen
Rt.
Aberdeen, Idaho 83210

Re: Permit No. 35-7618

Dear Mr. Irigoyen:

A representative of this Department has made an examination of the works covered by your Permit No. 35-7618, and has found the following:

Amount of water that can be recognized as beneficially used under Idaho law: 1.48 cfs Source: groundwater

The maximum quantity diverted shall not exceed 276.5 acre feet per year.

Point(s) of diversion: SW¼SE¼, Sec. 26, T5S, R31E, county of Bingham

Beneficial use: Irrigation on 79 acres within W½SE¼, Sec. 26, T5S, R31E

Priority date established: 6-14-1976

Conditions (if any):

If you do not concur with these findings please contact us within 10 days, otherwise a water license will be issued as set forth above.

Sincerely,

JIM JOHNSON
Water Distribution Supervisor

MICROFILMED

Form 219
12/79

State of Idaho
DEPARTMENT OF WATER RESOURCES
FIELD REPORT

35-7618
Permit No.

CONTACT WITH PERMIT HOLDER

	DATE	INITIALS	REMARKS
☐ Appointment letter mailed:			
☐ Telephone call made: (List Telephone No. used)			
☐ Appointment scheduled for: (Date, time, location)			

EXAMINATION

Date 7-14-81 Accompanied by Juan Irigoyen Total Q measured 1.48 cfs ✓

If source is surface water, estimate total flow of source

Methods of measurement Annubar ✓ Meets Permit requirements?

Measurement calculations:		
V = 79 acres x 3.5 af/a = 276.5 afa	$(7.5"ID)^2 \times 3.85 \times \sqrt{9.4 \text{ adjusted}}$ 663.9 gpm = 1.48 cfs ✓	V = 1.48 cfs x 1.9835 x 214 = 628

WELL/DIVERSION* NO.	HP	MOTOR MAKE	MOTOR SERIAL NO.	PUMP MAKE	PUMP SERIAL NO.	MEASURING DEVICE TYPE	CONDITION OF MEAS. DEV.	REMARKS
✓	60	GE	HM7811359	Berkely	7700012	Annubar		

System Description well/pump to 8" mainline running north to serve 4 wheel lines.

*Code with map on reverse side. Disregard code if only one.

RECOMMENDED AMOUNTS Irrigation requirement = 3.5 AFA/Acre

USE	Q (cfs)	V (afa)	FROM	TO
Irrigation	1.48 cfs ✓	276.5 ✓	4-1	11-1
Total	1.48 cfs ✓	276.5 afa ✓		

Remarks

Overlaps Chk'd
ok Jim

MICROFILMED

MAP (Attach Aerial Photo)

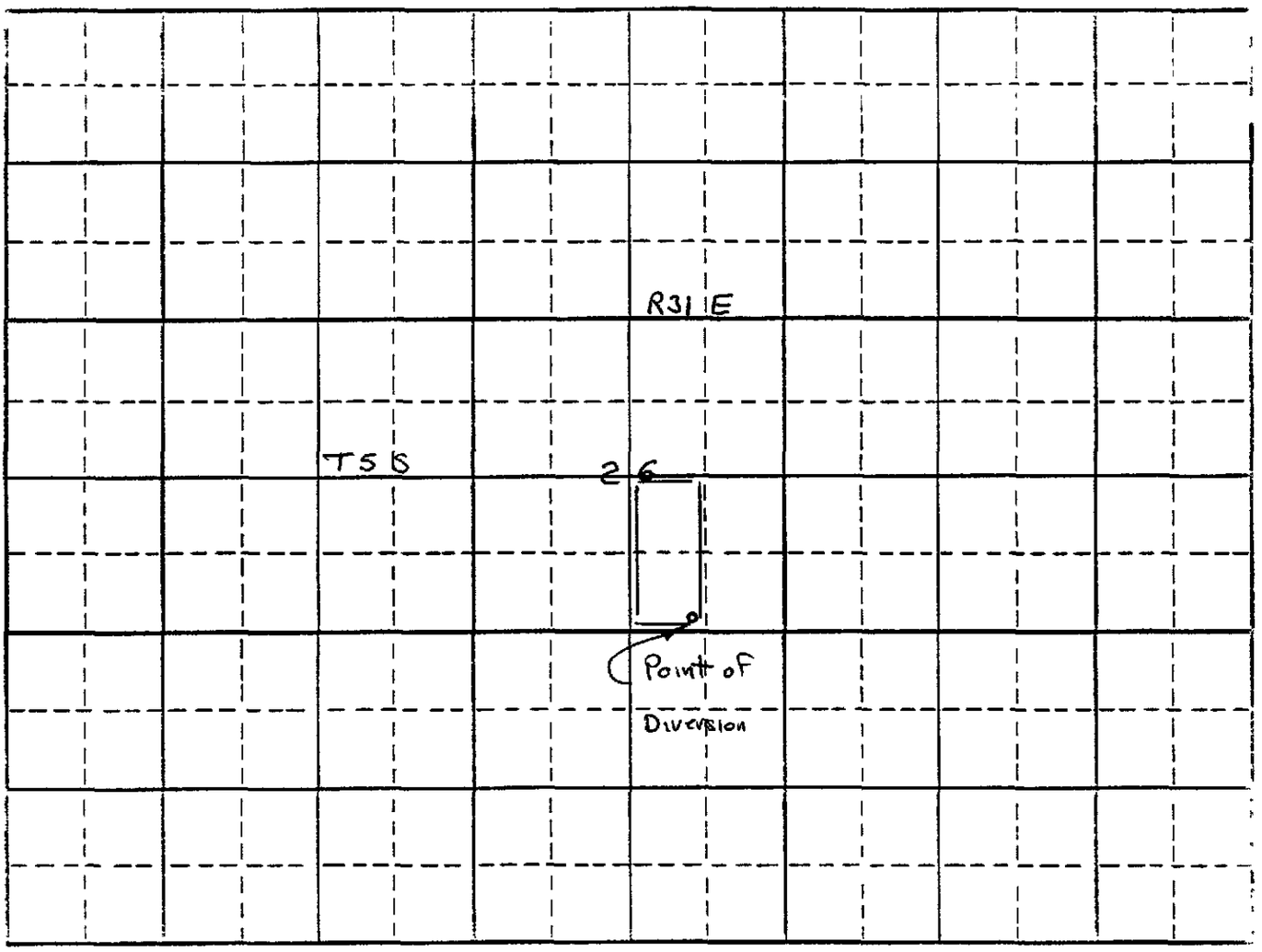

SCHEMATIC DIAGRAM OF SYSTEM

(Include distance from pump to measuring device, if applicable.)

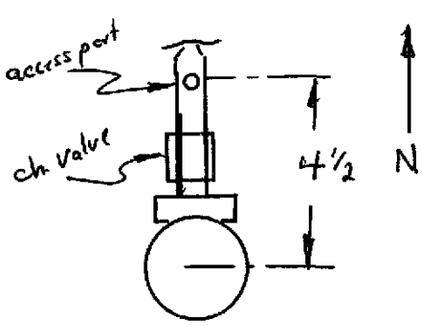

Point(s) of diversion: SW¼ of SE¼ Section 26 T5S R31E

Place(s) of Use

TWP.	RGE.	SEC.	NE¼				NW¼				SW¼				SE¼				TOTALS
			NE¼	NW¼	SW¼	SE¼	NE¼	NW¼	SW¼	SE¼	NE¼	NW¼	SW¼	SE¼	NE¼	NW¼	SW¼	SE¼	
5S	31E	26														40	39		79

Recommended Amendments:

☐ Change P.D. as reflected above ☐ Add P.D. as reflected above ☑ None

☐ Change P.U. as reflected above ☐ Add P.U. as reflected above ☐ Other _____

Examiner's Signature H.W. Jones Date 12-24-81

Checked by K Cullen Date 1-12-82

Approved by [illegible] Date 2-4-82

MICROFILMED

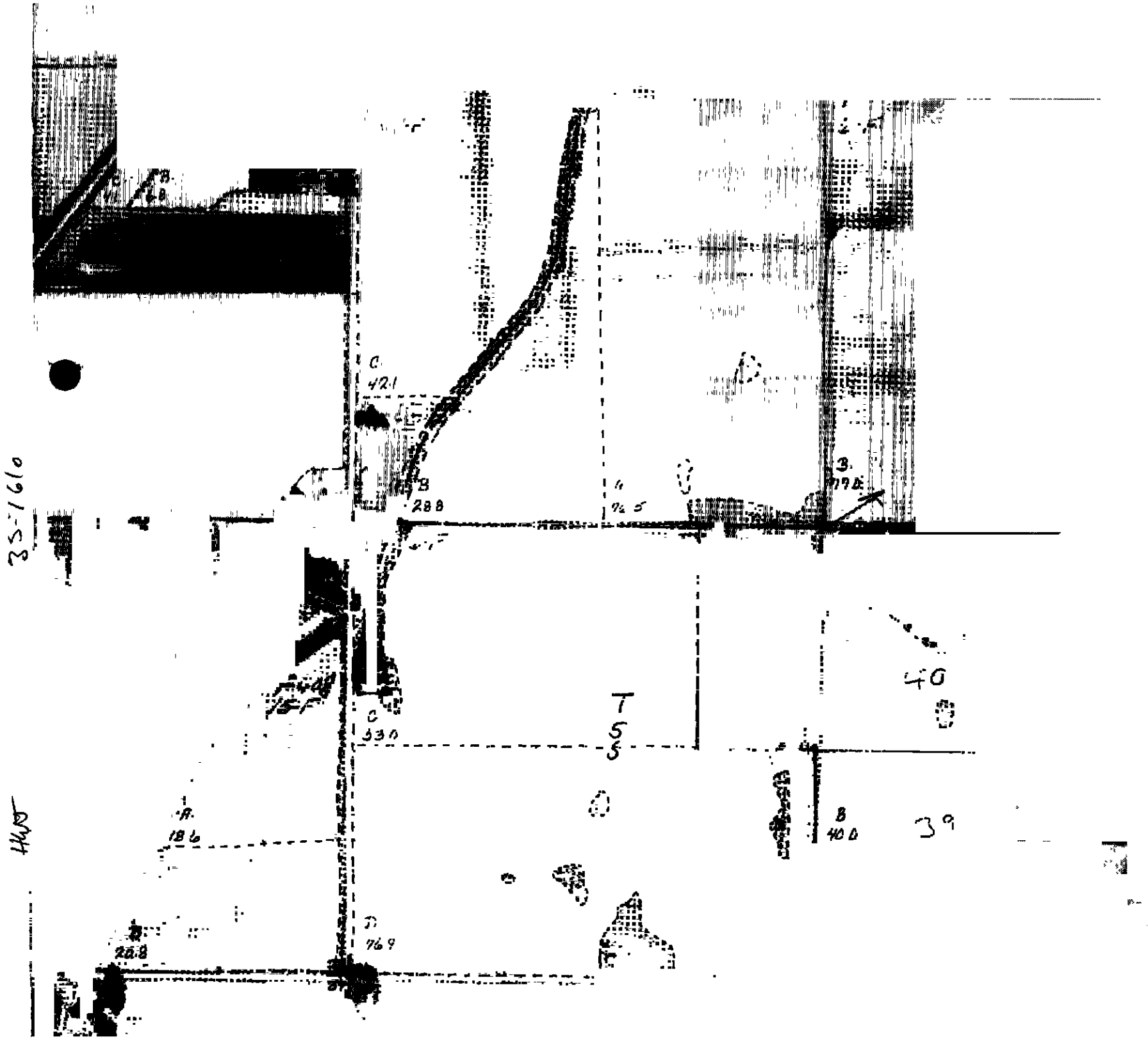

35-1610

44.05

IDWR SUPPLEMENTAL FIELD REPORT
FOR ANNUBAR MEASUREMENT

Measured by: HWJ

Date: 12-24-81

Owner: Juan Irigoyen

Permit #: 35-7618

Description of well &/or measuring site (give distance to restrictions upstream and downstream): 60 Hp pump via 8" mainline running North to 4 wheel lines. Access port has ch. valve 2½' upstream.

Measured inside diameter of pipe in inches 7.5"

Size of Annubar used in test 6.065

State ID# of Meter used 191117

Size Eagle Eye Meter used 0-13

State ID# of Meter used 091461

Date of Last Calibration of Meter 4/81

Observed inches of H20 read on Meter 9.9'

Adjusted inches of H20 from Last Calibration 9.4"

CALCULATION:

$$\frac{(3.85) \times \overset{(7.5)}{(A)^2} \times \overset{\sqrt{9.4}}{(B)}}{448.8} = 663.9 = 1.48 \text{ cfs measured}$$

Where A and B are measured in inches and 3.85 is a constant for the model 75 Annubar

SKETCH:

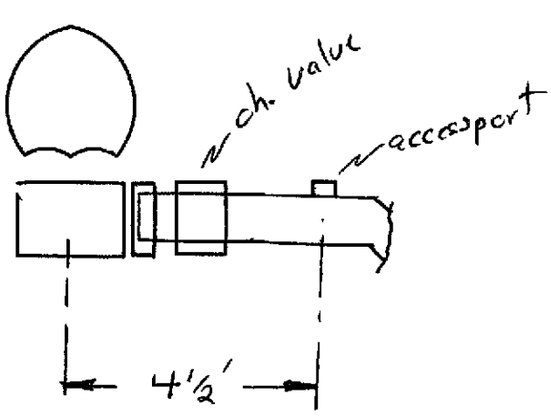

MICROFILMED

STATE OF IDAHO
DEPARTMENT OF WATER RESOURCES
EASTERN REGION

John V Evans
Governor

C. Stephen Allred
Director

1515 Lincoln Road
Idaho Falls, Idaho 83401
(208) 523-7186

June 25, 1981

RE: Permit No. 35-7613

Juan A. Irigoyen
Aberdeen,
Idaho 83210

Dear Mr. Irigoyen:

We acknowledge receipt of the proof of beneficial use card submitted for the above referenced permit.

Before a license can be issued, a field examination must be made by a representative of this department. We cannot tell just when this examination will be made, but our examiner will try to contact you at the time he makes the examination so that you may show him the system.

If you have any questions regarding the field examination, please contact our eastern regional office.

Very truly yours,

HAROLD JONES
Sr. Resource Agent

HJ:cw

cc: IDWR - State Office

MICROFILMED

DEPARTMENT OF WATER RESOURCES

The Idaho Department of Water Resources will consider this card as a statement that the permit holder has completed development to the extent shown below of Permit No. 35-7618.

Name(s) of Permit Holder: JUAN A. IRIGOYEN

Post Office Address: RT. ABERDEEN, IDAHO 83210

Tel. No. 397-4722

Source of Water: Well

Extent of Use:
- ☐ Domestic _____ (number of households)
- ☐ Stockwater _____ (number and type of stock)
- ☒ Irrigation 80 (acres)
- ☐ Other _____

Measuring Device: Required? ☐ Yes ☐ No Installed? ☐ Yes ☐ No

Access Port: Required? ☒ Yes ☐ No Installed? ☐ Yes ☐ No

The above information is a true statement of the extent to which the above numbered permit has been developed.

5-14-1981
Date

Juan A. Irigoyen
Signature of Permit Holder

MICROFILMED

Juan [redacted] Irigoyen
RT. Aberdeen
Idaho 83210

ABERDEEN, ID
MAY 15
AM
1981
83210

RECEIVED
MAY 18 1981
Department of Water Resources

IDAHO DEPARTMENT OF WATER RESOURCES
STATEHOUSE
BOISE, IDAHO 83720

STATE OF IDAHO

DEPARTMENT OF WATER RESOURCES

STATEHOUSE
BOISE, IDAHO 83720
(208) 334-4440
CERTIFIED MAIL

IRIGOYEN, JUAN A.
RT.
ABERDEEN, ID 83210

138126

APRIL 30, 1981

DEAR PERMIT HOLDER:

ONE OF THE CONDITIONS OF APPROVAL OF YOUR WATER PERMIT NO. 35-7618 WAS THAT EVIDENCE OF THE EXTENT OF DEVELOPMENT MUST BE SUBMITTED TO THIS OFFICE ON OR BEFORE JULY 01, 1981. (SEE LAST PAGE OF YOUR APPROVED PERMIT). ENCLOSED IS A POST CARD WHICH MAY BE USED TO SUBMIT THE REQUIRED PROOF OF BENEFICIAL USE.

IF YOU HAVE NOT FULLY COMPLETED YOUR PROJECT, AND YOU HAVE NOT PREVIOUSLY RECEIVED AN EXTENSION OF TIME, YOU MAY REQUEST AN EXTENSION OF TIME PROVIDED THE DELAY IS FOR REASONABLE CAUSE AS INDICATED IN SECTION 42-204, IDAHO CODE, AMENDED. IF YOU HAVE BEEN PREVENTED FROM PROCEEDING BY A GOVERNMENTAL AGENCY OR BY LITIGATION, MORE THAN ONE EXTENSION OF TIME CAN BE GRANTED. A REQUEST FOR EXTENSION OF TIME FORM IS ENCLOSED FOR YOUR CONVENIENCE. PLEASE NOTE THAT A FEE OF $15.00 MUST BE SUBMITTED WITH THIS FORM.

EITHER THE BENEFICIAL USE POST CARD OR A REQUEST FOR AN EXTENSION OF TIME MUST BE RECIEVED BY THIS DEPARTMENT ON OR BEFORE THE ABOVE MENTIONED DATE, OTHERWISE, THE PERMIT WILL LAPSE AND BE OF NO FURTHER FORCE OR EFFECT WITHIN 60 DAYS.

SINCERELY,

RITA FLECK
SR. SECRETARY

ENCLOSURES

MICROFILMED

State of Idaho
DEPARTMENT OF WATER RESOURCES
STATE OFFICE, 450 W. State Street, Boise, Idaho

JOHN V. EVANS
Governor

C. STEPHEN ALLRED
Director

Mailing address:
Statehouse
Boise, Idaho 83720
(208) 334-4440

July 28, 1980

Dear Wateruser:

The enclosed Order changes the measuring device condition of approval on your water right permit.

The changed condition is less restrictive and provides you the option to install an access port or have your system measured and certified by a professional engineer. Instructions for access port installation are also enclosed.

If you have questions regarding this matter, please contact the Regional Office nearest to you.

Sincerely,

David R. Tuthill Jr.

DAVID R. TUTHILL JR., P.E.
Supervisor, Water Allocations Section

DRT:jg

Enclosures

Northern Region Office
Rt. #5 Box 203, Government Way
Coeur d'Alene, Idaho 83814

Eastern Region Office
1515 Lincoln Road
Idaho Falls, Idaho 83401

Southern Region Office
1041 Blue Lake Boulevard North
Twin Falls, Idaho 83301

Western Region Office
92 South Cole Road
Boise, Idaho 83705

USE TYPEWRITER OR BALL POINT PEN

State of Idaho
Department of Water Resources

WELL DRILLER'S REPORT

RECEIVED
JAN 31 1977
Department of Water Resources

State law requires that this report be filed with the Director, Department of Water Resources within 30 days after the completion or abandonment of the well.

1. WELL OWNER

Name Juan Irigoyen

Address Aberdeen, Id

Owner's Permit No. 35 7618

2. NATURE OF WORK

xx☐ New well ☐ Deepened ☐ Replacement

☐ Abandoned (describe method of abandoning)

3. PROPOSED USE

☐ Domestic ☒ Irrigation ☐ Test ☐ Other (specify type)

☐ Municipal ☐ Industrial ☐ Stock ☐ Waste Disposal or Injection

4. METHOD DRILLED

☐ Cable ☒ Rotory ☐ Dug ☐ Other

5. WELL CONSTRUCTION

Diameter of hole 12 inches Total depth 55 feet

Casing schedule: x☐ Steel ☐ Concrete

Thickness	Diameter	From	To
.250 inches	14 inches	+ 1 feet	18 feet
inches	inches	feet	feet
inches	inches	feet	feet
inches	inches	feet	feet
inches	inches	feet	feet

Was casing drive shoe used? ☐ Yes ☑ No

Was a packer or seal used? ☐ Yes ☑ No

Perforated? ☐ Yes ☑ No

How perforated? ☐ Factory ☐ Knife ☐ Torch

Size of perforation ____ inches by ____ inches

Number	From	To
perforations	feet	feet
perforations	feet	feet
perforations	feet	feet

Well screen installed? ☐ Yes ☑ No

Manufacturer's name

Type Model No.

Diameter Slot size Set from feet to feet

Diameter Slot size Set from feet to feet

Gravel packed? ☐ Yes ☐ No Size of gravel

Placed from feet to feet

Surface seal depth 18 Material used in seal ☐ Cement grout ☐ Puddling clay ☑ Well cuttings

Sealing procedure used ☐ Slurry pit ☐ Temporary surface casing ☐ Overbore to seal depth

6. LOCATION OF WELL

Sketch map location must agree with written location.

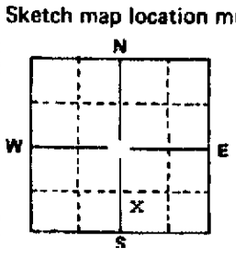

Subdivision Name

Lot No. Block No.

County Bingham

SW ¼ SE ¼ Sec. 26, T. 5 N/S, R. 31 E/W

7 WATER LEVEL

Static water level 20 feet below land surface

Flowing? ☐ Yes ☒ No G.P.M. flow

Temperature ° F. Quality

Artesian closed-in pressure p s i.

Controlled by ☐ Valve ☐ Cap ☐ Plug

8. WELL TEST DATA

☐ Pump ☐ Bailer ☐ Other

Discharge G.P.M.	Draw Down	Hours Pumped

9. LITHOLOGIC LOG

Hole Diam.	Depth From	Depth To	Material	Water Yes	Water No
	0	10	Top Soil		
	10	28	Black Lava	x	
	28	55	Broken Lava, Red & Black	x	
	55		Clay and Sand		

10.

Work started 10/28/76 finished 10/30/76

11. DRILLERS CERTIFICATION

Firm Name Paul Vollmer & Son Firm No. 67

Address Aberdeen, Id Date Jan 27 1977

Signed by (Firm Official) Paul Vollmer Jr

and

(Operator) Gary Vollmer

USE ADDITIONAL SHEETS IF NECESSARY FORWARD THE WHITE COPY TO THE DEPARTMENT

MICROFILMED

July 26, 1976

Re: Permit No. 35-7618

Juan A. Irigoyen
Aberdeen, ID 83210

Dear Mr. Irigoyen:

Enclosed is a copy of your approved Application for Permit No 35-7618 . We direct your attention to the conditions of approval as listed on the fourth page.

Be sure to note that a special condition requiring you to install and maintain a measuring device at your point of diversion has been placed upon your permit. We are enclosing a letter describing different types of measuring devices accepted by this office.

Sincerely,

BOBBY D. FLEENOR
Chief, Water Rights

BDF:jfr

Enclosures

July 12, 1976

RE: Application for Permit No. 35-7618 IRIGOYEN

The Blackfoot News
P.O. Box 70
Blackfoot, Idaho 83221

Gentlemen:

Would you please submit an affidavit of publication and certified bill in connection with the above referenced application. The legal notice was to have been published in your paper on June 24 and July 1, 1976.

Your cooperation in this matter is greatly appreciated.

Very truly yours,

RONALD D. CARLSON
Supervisor,
Eastern Region

RDC:CW

cc: IDWR - State Office

June 17, 1976

RE: Application for Permit No. 35-7618 IRIGOYEN

The Blackfoot News
P.O. Box 70
Blackfoot, Idaho 83221

Gentlemen:

Enclosed you will find a legal notice which we wish to have published once a week for two consecutive weekly issues of your newspaper. We have inserted the publication dates allowing time for you to submit us a galley proof for review before publication.

After sending us a galley proof, proceed with the publication on the dates we have inserted, assuming the notice is correct. If we have any corrections, we will notify you before the first publication. If you cannot publish the notice on the proposed dates, please contact us immediately.

An affidavit of publication must be submitted to the Department along with the publication bill.

Very truly yours,

RONALD D. CARLSON
Supervisor,
Eastern Region

Bill submitted 7-15-76 by CW

RDC:CW

Enc: Legal Notice (1)

NOTICE OF APPLICATION FOR WATER PERMIT

Notice is hereby given that Juan A Irigoyen, Aberdeen, Idaho has on 6-14-76 submitted Application No 35-7618 for a permit to appropriate 1.60 cubic feet per second of water from a ground-water source by means of well and pump within the SW¼SE¼, Sec. 26, T 5S, R 31E, B.M., Bingham County, to be used from Apr 1 to Nov 1 for the irrigation of 80 acres within the W½SE¼, Sec 26, T 5S, R 31E, B M.

If issued, this permit will be subject to all prior water rights. Protests against the granting of the permit must be filed with the Idaho Department of Water Resources, 1515 Lincoln Road, Idaho Falls, Idaho, 83401 on or before July 12, 1976.

R KEITH HIGGINSON
Director

(43712

(4371)
Pub 6 24, 7 1

NOTICE OF APPLICATION FOR WATER PERMIT

Notice is hereby given that **Juan A. Irigoyen, Aberdeen, Idaho**

has on **6-14-76** submitted Application No. **35-7618**

for a permit to appropriate **1.60** cubic feet per second ~~acre feet per annum~~

of water from **a ground-water source**

by means of **well and pump**

within the **SW¼SE¼, Sec. 26, T. 5S, R. 31E, B.M., Bingham County;**

to be used from **Apr. 1 to Nov. 1**

for **the irrigation of 80 acres**

within the **W½SE¼, Sec. 26, T. 5S, R. 31E, B.M.**

If issued, this permit will be subject to all prior water rights. Protests against the granting of the permit must be filed with the Idaho Department of Water Resources, 1515 Lincoln Road, Idaho Falls, Idaho, 83401 on or before **July 12, 1976**.

R. KEITH HIGGINSON

Director

Published in the **Blackfoot News, Blackfoot, Idaho**

on **June 24** and **July 1, 1976**

DEPARTMENT OF WATER RESOURCES
- STAFF ANALYSIS -

Item	Initial	Date	
			Application No. _____
			✓ Source
			✓ Point of Diversion
			✓ County
			✓ Quantity of Water and Period of Use
			✓ Description of Diverting Works
			✓ Time required for B/U of water
			✓ Place of Use or Acres Irrigated
			✓ Map
			✓ Signature
			✓ Fee
(1)	BR	6-14	In form to receipt
(2)	"	"	Send Copies to:
			___ Idaho State Health Department
			NO Idaho Fish and Game Department
			___ Bureau of Land Management
(3)	"	"	___ Request Special Use Permit from U.S.F.S.
			NO Request Easement from B.L.M.
			___ Request Information from Applicant
(4)	"	"	In form for advertising
(5)	"	"	Platted on Map No. SS 31E
(6)	"	"	Located within Water District No. N.A.
(7)	"	"	Critical groundwater area: yes ___ no ✓
(8)	"	"	Groundwater levels:
			___ Declining, ✓ Stable, ___ Increasing
			(comment) Obs well sec 20 T5S R31E
(9)	"	"	Other rights on the same place of use None
(10)			Comments: _____
(11)	CW	7-15-76	Affidavit of Publication received (date) July 15, 1976
(12)	CW	7-15-76	Final date for protests July 12, 1976
			Protests received: yes ___ no ✓
(13)	RDC	7/15/76	All requested information received from agencies or applicant: yes ___ no ___
(14)	"	"	Action recommended:
			✓ Approve ___ Deny
			6/14/76 Proposed Priority
			___ Reason for Reduction _____
			✓ Measuring device required
			___ See attached sheet for other conditions of approval
			___ No special conditions for approval
(15)	District E		By RDC Date 7/15/76

Copy