STATE OF IDAHO

Department of Water Resources
Eastern Region

Water Right(s): 31-07262 and 31-11641

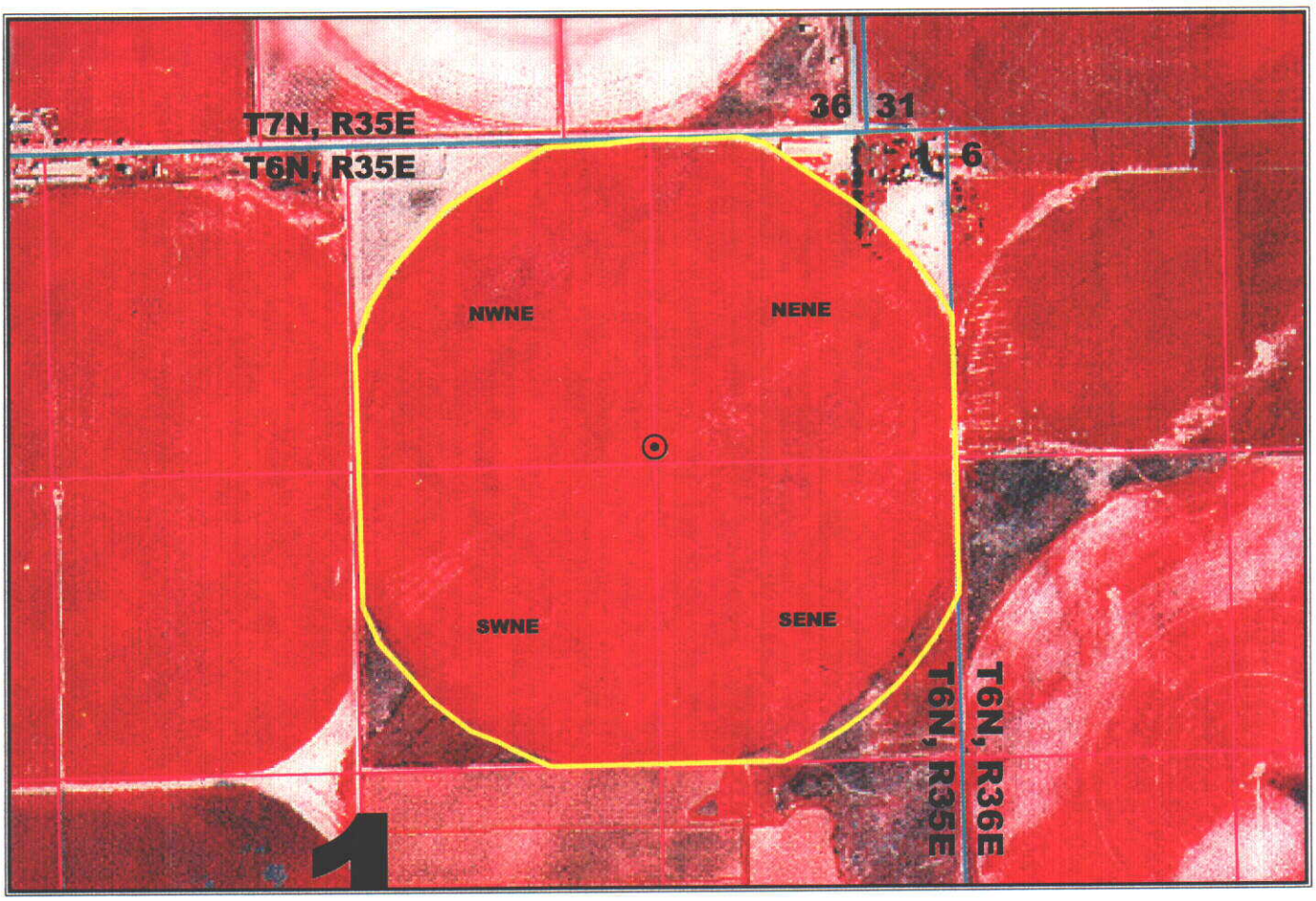

1320 0 1320 Feet

Total Irrigated Acres: 141

Permissible Place of Use

N
W E
S

- Point(s) of Diversion
- Place of Use
- Quater Section Lines
- Section Lines

GIS Place of Use Illustration
1987/1988 Napp photography
Prepared by: C. Saxton
Date: March 2001

Sid Ashcraft

WR #(s): 31-07262, 31-11641

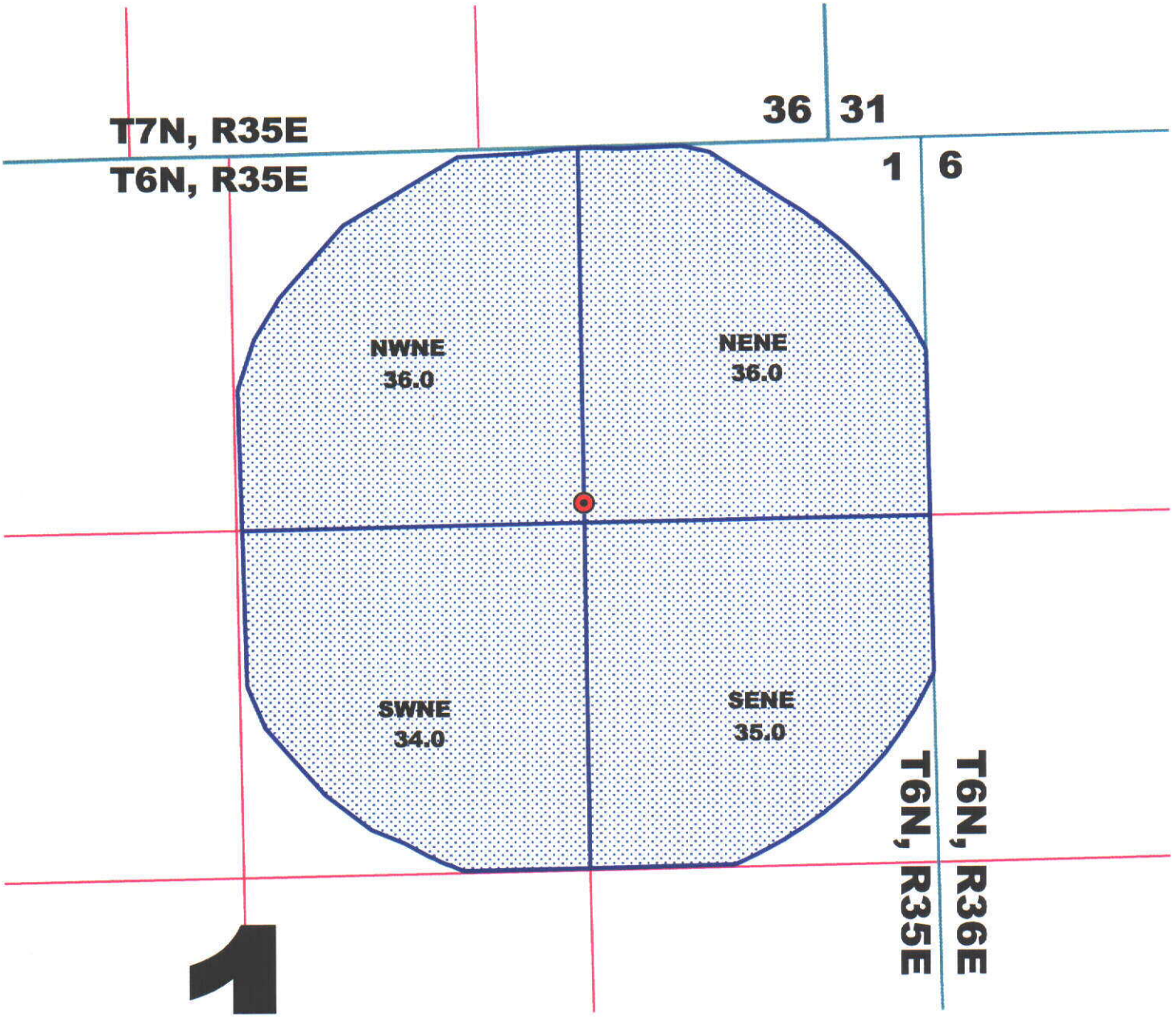

Total Irrigated Acres: 141

Point of Diversion

Place of Use

Acreage Distribution

Prepared By: Craig Saxton
March 2001

STATE OF IDAHO

Department of Water Resources
Eastern Region

Water Right(s): 31-07262

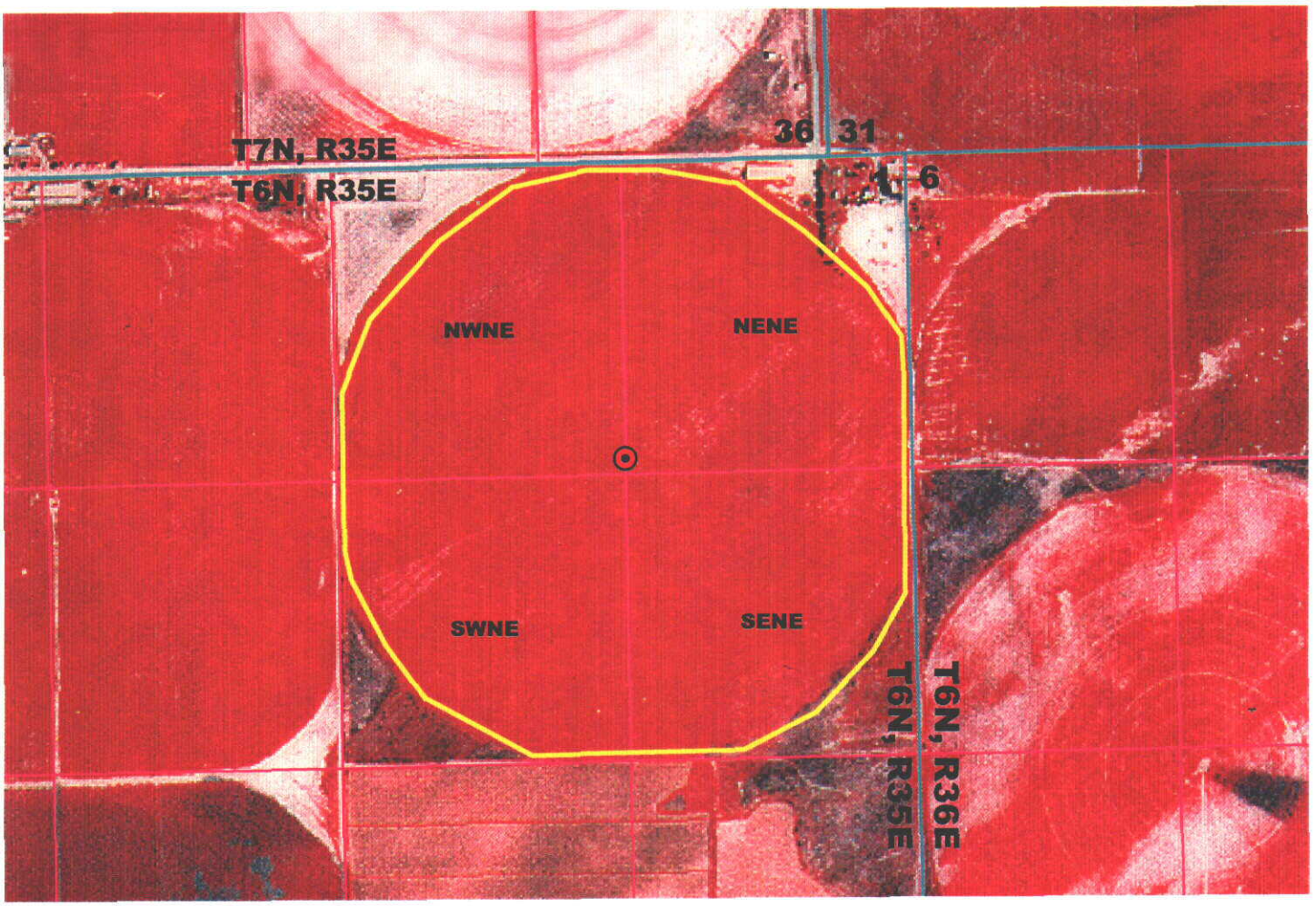

1320 0 1320 Feet

Total Irrigated Acres: 132

N
W E
S

- Point of Diversion
- Place of Use
- Quater Section Lines
- Section Lines

GIS Place of Use Illustration
1987/1988 Napp photography
Prepared by: C. Saxton
Date: December 2000

WR #: 31-07262

Sidney Ashcraft

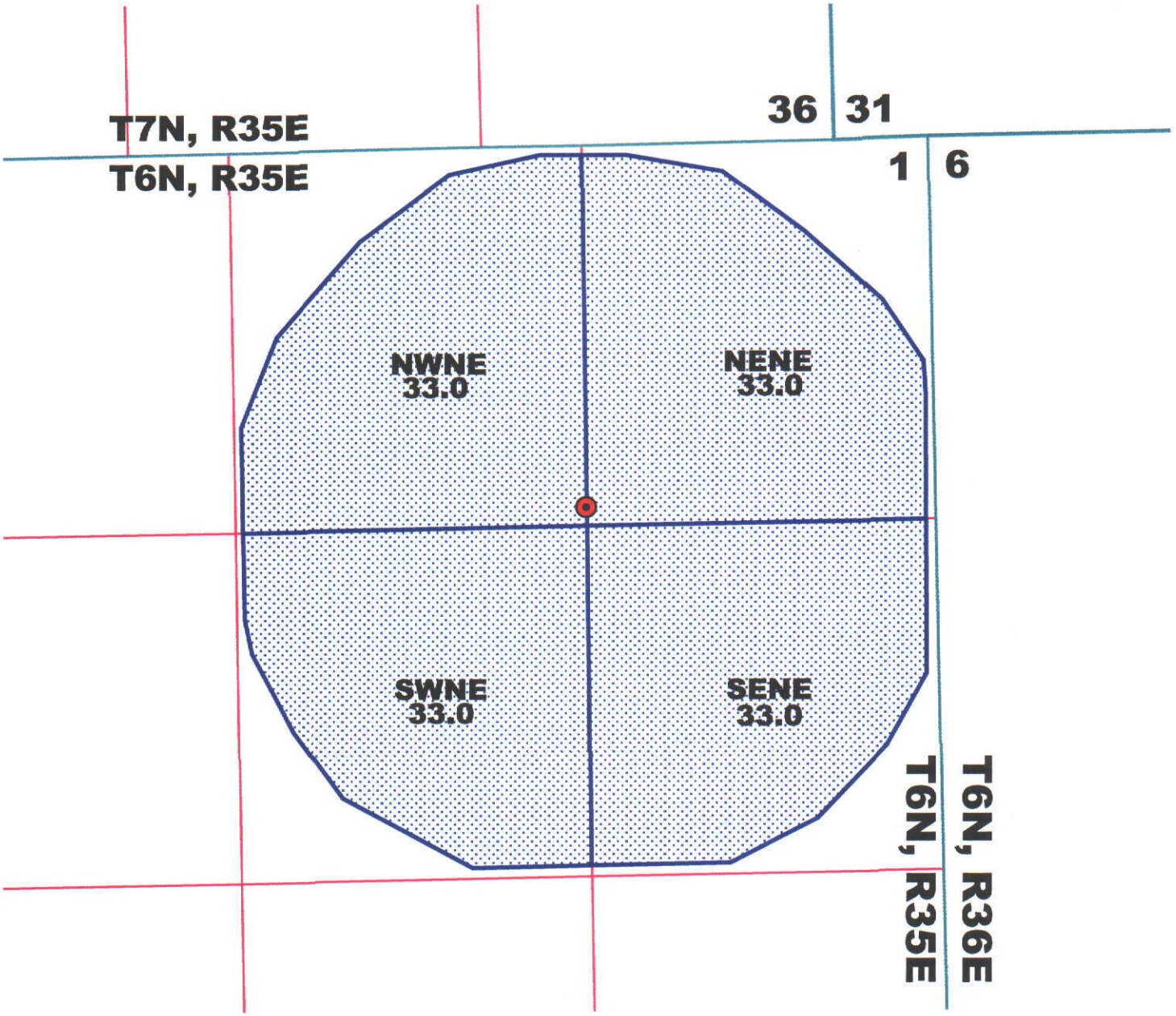

Total Irrigated Acres: 132

Acreage Distribution

Prepared By: Craig Saxton
December 2000

IDAHO DEPARTMENT OF WATER RESOURCES
PRELIMINARY RECOMMENDATION OF WATER RIGHTS ACQUIRED UNDER STATE LAW

RIGHT NUMBER: 31-7262

NAME AND ADDRESS:
JANA ASHCRAFT
SIDNEY ASHCRAFT
2104 E 1800 N
HAMER, ID 83425

SOURCE: GROUND WATER

QUANTITY:
2.05 CFS
396 AFY

USE OF THIS RIGHT WITH RIGHT NO. 31-11641 IS LIMITED TO A TOTAL COMBINED DIVERSION RATE OF 2.05 CFS.

PRIORITY DATE: 06/13/1977

POINT OF DIVERSION: T06N R35E S1 SWNENE Within JEFFERSON County

PURPOSE AND PERIOD OF USE:

PURPOSE OF USE	PERIOD OF USE	QUANTITY
IRRIGATION	04-01 10-30	2.05 CFS 396.00 AFY

PLACE OF USE:

IRRIGATION Within JEFFERSON County

T06N R35E S1	LOT 1	NENE	36	T06N R35E S1	LOT 2	NWNE	36
T06N R35E S1		SWNE	34	T06N R35E S1		SENE	35

141 ACRES TOTAL

THIS RIGHT IS LIMITED TO THE IRRIGATION OF 9.0 ACRES WITHIN THE PLACE OF USE DESCRIBED ABOVE IN A SINGLE IRRIGATION SEASON.

OTHER PROVISIONS NECESSARY FOR DEFINITION OR ADMINISTRATION OF THIS WATER RIGHT:

THIS PARTIAL DECREE IS SUBJECT TO SUCH GENERAL PROVISIONS NECESSARY FOR THE DEFINITION OF THE RIGHTS OR FOR THE EFFICIENT ADMINISTRATION OF THE WATER RIGHTS AS MAY BE ULTIMATELY

DETERMINED BY THE COURT AT A POINT IN TIME NO LATER THAN THE ENTRY OF A FINAL UNIFIED DECREE. SECTION 42-1412(6), IDAHO CODE.

EXPLANATORY MATERIAL: BASIS OF CLAIM - License

RIGHT INCLUDES ACCOMPLISHED CHANGE IN PLACE OF USE PURSUANT TO SECTION 42-1425, IDAHO CODE.

RIGHT NO. 31-11641 IS AN ENLARGEMENT OF THIS RIGHT PURSUANT TO SECTION 42-1426, IDAHO CODE.

IN THE DISTRICT COURT OF THE FIFTH JUDICIAL DISTRICT OF THE STATE OF IDAHO,
IN AND FOR THE COUNTY OF TWIN FALLS

IN RE THE GENERAL ADJUDICATION
OF RIGHTS TO THE USE OF WATER FROM
THE SNAKE RIVER BASIN WATER SYSTEM

CIVIL CASE NUMBER: 39576

Ident. Number 31-7262
Date Received: 11/23/88
Receipt No: E004391
Received By:

AMENDED

NOTICE OF CLAIM TO A WATER RIGHT
ACQUIRED UNDER STATE LAW

1. Name of Claimant(s)

SIDNEY ASHCRAFT Phone: (208)662-5465

2104 E 1800 N
HAMER ID USA 83425

JANA ASHCRAFT Phone:

2104 E 1800 N
HAMER ID USA 83425

2. Date of Priority: 06/13/1977

3. Source: GROUND WATER Trib. to:

4. Point of Diversion:

Township	Range	Section	1/4	1/4	1/4	Lot	County	Type
06N	35E	1	SW	NE	NE		JEFFERSON	

5. Description of diverting works:

WELL 150' DEEP; PUMP 100 HP, MAINLINE TO CENTER PIVOT

6. Water is used for the following purposes:

Purpose	From	To	C.F.S.	(or) A.F.A
IRRIGATION	3/15	11/15	2.05	

7. Total Quantity Appropriated is:
2.05 C.F.S.

8. Total consumptive use:

9. Non-irrigation uses:

10. Place of use:

Township	Range	Section	1/4 of 1/4		Lot	Use	Acres
06N	35E	1	NE	NE	1	IRRIGATION	36
			NW	NE	2	IRRIGATION	36
			SE	NE		IRRIGATION	35
			SW	NE		IRRIGATION	34
						Section Acres	141
06N	36E	6	NW	NW	4	IRRIGATION	0.1
			SW	NW	5	IRRIGATION	0.1
						Section Acres	0.2
						Total Acres	141.2

11. Place of use in counties: JEFFERSON

12. Do you own the property listed above as place of use? Yes

13. Other Water Rights Used:

14. Remarks:

Claim amended 2/27/2001 to reflect permissible place of use with enlargement claim 31-11641.

15. Basis of Claim: License

16. Signature(s)

(a.) By signing below, I/We acknowledge that I/We have received, read and understand the form entitled "How you will receive notice in the Snake River Basin Adjudication." (b.) I/We do _____ do not _____ wish to receive and pay a small annual fee for monthly copies of the docket sheet.

Number of attachments: _____

For Individuals:

I/We do solemnly swear or affirm that the statements contained in the foregoing document are true and correct.

Signature of Claimant(s): Sidney T Ostbergt Date: 2-27-01

_____ Date: _____

State of Idaho)
) SS.
County of Bonneville)

Subscribed and sworn (or affirmed) before me this 27 day of February 2001

Bryce A. Contor
Notary Public

Residing at Mud Lake ID

My commission Expires 10/14/05

BRYCE A. CONTOR NOTARY PUBLIC STATE OF IDAHO

STATE OF IDAHO

Department of Water Resources
Eastern Region

Water Right(s): 31-07262

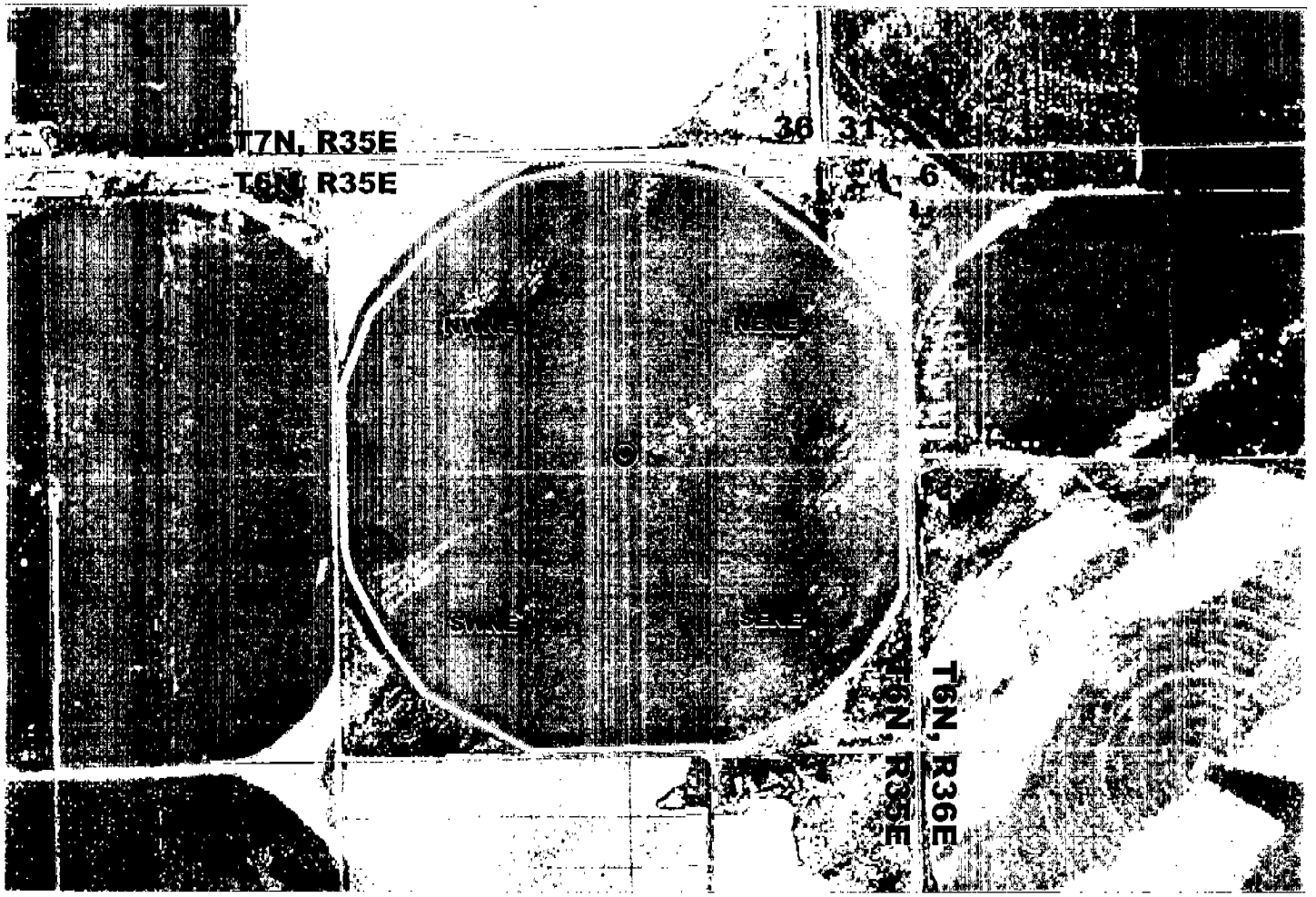

1320 0 1320 Feet

Total Irrigated Acres: 132

- ⊙ Point of Diversion
- Place of Use
- Quater Section Lines
- Section Lines

N
W E
S

GIS Place of Use Illustration
1987/1988 Napp photography
Prepared by: C. Saxton
Date: December 2000

WR #: 31-07262

Sidney Ashcraft

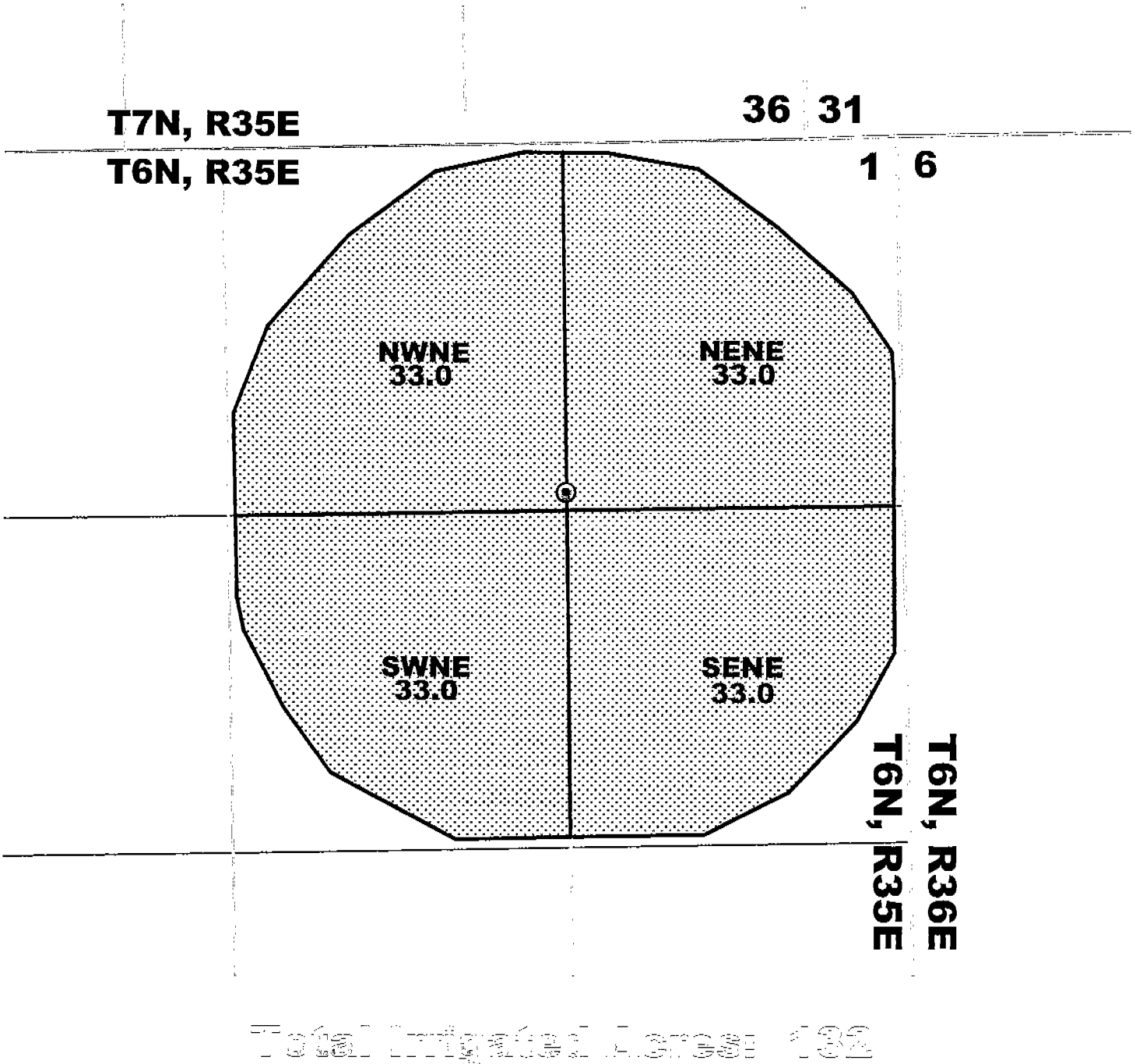

Total Irrigated Acres: 132

Acreage Distribution

Prepared By: Craig Saxton
December 2000

12/04/2000

IDAHO DEPARTMENT OF WATER RESOURCES
PRELIMINARY RECOMMENDATION OF WATER RIGHTS ACQUIRED UNDER STATE LAW

RIGHT NUMBER: 31-7262

NAME AND ADDRESS:
JANA ASHCRAFT
SIDNEY ASHCRAFT
2104 E 1800 N
HAMER, ID 83425

SOURCE: GROUND WATER

QUANTITY:
2.05 CFS
396 AFY

PRIORITY DATE: 06/13/1977

POINT OF DIVERSION: T06N R35E S1 SWNENE Within JEFFERSON County

PURPOSE AND PERIOD OF USE:

PURPOSE OF USE	PERIOD OF USE	QUANTITY
IRRIGATION	04-01 10-30	2.05 CFS 396.0 AFY

PLACE OF USE:

IRRIGATION Within JEFFERSON County

T06N R35E S1	NENE	33	T06N R35E S1	NWNE	33
T06N R35E S1	SWNE	33	T06N R35E S1	SENE	33

132 ACRES TOTAL

OTHER PROVISIONS NECESSARY FOR DEFINITION OR ADMINISTRATION OF THIS WATER RIGHT:

THIS PARTIAL DECREE IS SUBJECT TO SUCH GENERAL PROVISIONS NECESSARY FOR THE DEFINITION OF THE RIGHTS OR FOR THE EFFICIENT ADMINISTRATION OF THE WATER RIGHTS AS MAY BE ULTIMATELY DETERMINED BY THE COURT AT A POINT IN TIME NO LATER THAN THE ENTRY OF A FINAL UNIFIED DECREE. SECTION 42-1412(6), IDAHO CODE.

EXPLANATORY MATERIAL: BASIS OF CLAIM - License

IDAHO DEPARTMENT OF WATER RESOURCES
Adjudication Recommended Right Report

WATER RIGHT NO. 31-7262

Owner Type	Name and Address
Current Owner	SIDNEY ASHCRAFT
Current Owner	JANA ASHCRAFT
	2104 E 1800 N
	HAMER, ID 83425
	(208)662-5464

Priority Date: 06/13/1977
Basis: License
Status: Valid

Source	Tributary to
GROUND WATER	

Beneficial Use	From	To	Diversion Rate	Volume	Subuse Code
IRRIGATION	04/01	10/30	2.05 CFS	396 AFA	
Total Diversion			2.05 CFS	396 AFA	

Point(s) of Diversion:

Township	Range	Section	1/4 of 1/4 of 1/4	Lot	County
06N	35E	1	SW NE NE	0	JEFFERSON

IRRIGATION Use:
Acre Limit: 132

Place(s) of use:

Place of Use Legal Description: IRRIGATION JEFFERSON County

Township	Range	Section	Lot	Tract	Acres	Lot	Tract	Acres	Lot	Tract	Acres	Lot	Tract	Acres
06N	35E	1		NENE	33		NWNE	33		SWNE	33		SENE	33

Total Acres: 132

Conditions of Approval:

1. C18 THIS PARTIAL DECREE IS SUBJECT TO SUCH GENERAL PROVISIONS NECESSARY FOR THE DEFINITION OF THE RIGHTS OR FOR THE EFFICIENT ADMINISTRATION OF THE WATER RIGHTS AS MAY BE ULTIMATELY DETERMINED BY THE COURT AT A POINT IN TIME NO LATER THAN THE ENTRY OF A FINAL UNIFIED DECREE. SECTION 42-1412(6), IDAHO CODE.

Comments:

Author	Date	Subject	Comment
bcontor	11/29/00	recommendation	Claimed as licensed, confirmed by GIS, NWMD GPS, and NWMD flow measurement. No further analysis is required, eCVR not completed.
csaxton	12/4/00	POU	POU greater than licensed. Letter submitted to claimant to file and enlargement claim.

Dates:
Licensed Date: 04/12/1982

Claim Received Date: 11/23/1988
Enlargement Use Priority Date:
Enlargement Statute Priority Date:
Decreed Date:
Date Filed with Court:
Objection Filed Date:
SF5 Filed:
Special Master Recom Signed Date:

Element Reviewed/Verified Dates:

Element	Last Review Date	Reviewer	Last Verified Date	Verifier	Status
Contacts	12/4/00 11:57:28 AM	csaxton			In Process
POD	12/4/00 11:58:19 AM	csaxton			In Process
POU	12/4/00 12:10:24 PM	csaxton			In Process
	12/4/00 12:06:23 PM	csaxton			In Process
Priority Date	12/4/00 11:58:04 AM	csaxton			In Process
Quantity	12/4/00 12:13:05 PM	csaxton			In Process
Season	12/4/00 12:11:03 PM	csaxton			In Process
Source	12/4/00 12:04:00 PM	csaxton			In Process
Summary	12/4/00 12:24:18 PM		12/4/00 12:24:18 PM	csaxton	Complete
	11/29/00 1:18:33 PM		11/29/00 1:18:33 PM	bcontor	Complete
Use	12/4/00 12:04:42 PM	csaxton			In Process

Other Information:

Receipt Number(s):
State or Federal: S
Owner Name Connector: OR
Overall Max Diversion Rate: 2.05
Overall Max Diversion Volume: 396
Generic Max Rate per Acre:
Generic Max Volume per Acre:
Civil Case Number:
Old Case Number:
Decree Plantiff:
Decree Defendant:
PresumptionFlag:
Notice of Error Flag:
Swan Falls Trust or Nontrust:
Swan Falls Dismissed:
DLE Act Number:
Cary Act Number:
Mitigation Plan: False

Verification Log:

Element	Date Time Stamp	Reviewer	Log Text
Contacts	12/4/00 11:57:27 AM	csaxton	1. Appointment has not been scheduled. Comment for 1: In House Review
POD	12/4/00 11:58:18 AM	csaxton	1. (NO) The basis is not beneficial use. 2. (YES) Parent right has a Point of Diversion. 3. (YES) The claimed Point of Diversion can be verified using the water right file. 8. (NO) Point of Diversion remark was not required. 9. (NO) Point of Diversion condition was not required.
POD	11/29/00 1:12:21 PM	bcontor	Edited point location
POU	12/4/00 12:10:22 PM	csaxton	1. (YES) The POU is required. 2. (NO) The basis of claim is not beneficial use. 3. (YES) The Parent Right has a POU. 4. (NO) The claimed POU can not be verified using the water right file. 5. (YES) There is evidence that there has been a change in the POU. 6. (NO) The change can not be verified as an accomplished transfer. 7. (YES) The change is an enlargement of the POU. Comment for 7: NAPP photography 8. (NO) An enlargement claim was not filed. 10. (NO) The claimant did not file an enlargement claim. Comment for 10: License 31-07262 12. (NO) POU remark was not required. 13. (NO) POU condition was not required.

POU	12/4/00 12:06:14 PM	csaxton	1. (YES) The POU is required. 2. (NO) The basis of claim is not beneficial use. 3. (YES) The Parent Right has a POU. 4. (YES) The claimed POU can be verified using the water right file. 12. (NO) POU remark was not required. 13. (NO) POU condition was not required.
Priority Date	12/4/00 11:58:02 AM	csaxton	1. (NO) There has not been a later court decree of the water right(s) from the water source. 4. (NO) The basis of claim is not beneficial use. 5. (NO) The basis of claim is not a posted notice. 6. (YES) Parent right has a priority date. 7. (NO) The basis of claim is not an application or permit. 12. (YES) The claim is recommended. 13. (YES) The claim is coded correctly. 14. (NO) Priority remark was not required. 15. (NO) Priority condition was not required.
Quantity	12/4/00 12:13:02 PM	csaxton	1. (NO) The basis of claim is not beneficial use. 2. (NO) The basis of claim is not a posted notice. 3. (YES) The parent right has a diversion rate and/or diversion volume. 4. (YES) The claimed diversion rate and/or volume can be verified using the water right file. 7. (YES) The parent right has an annual diversion volume limit. 8. (YES) Irrigation is a purpose of use. 9. (NO) Quantity remark was not required. 10. (NO) Quantity condition was not required.
Season	12/4/00 12:11:02 PM	csaxton	1. (NO) The basis of claim is not beneficial use. 2. (YES) The parent right has a period of use. 3. (YES) The claimed Period of Use can be verified using the water right file. 12. (YES) Irrigation is the purposed use. 14. (NO) The period of use on the decree, license or transfer is not shorter on either the start or end date than allowable under IDWR's current standard. 15. (NO) Period of Use remark was not required. 16. (NO) Period of Use condition was not required.
Source	12/4/00 12:03:58 PM	csaxton	1. (NO) The basis is not beneficial use. 2. (YES) Parent right has a source. 3. (YES) The claimed source can be verified using the water right file. 8. (NO) The source is not surface water. 10. (NO) Source remark was not required. 11. (NO) Source condition was not required.
Summary	12/4/00 12:24:17 PM	csaxton	1. (NO) The basis of the claim is not beneficial use. 3. (NO) There is no indication that there has been a five year period of continuous nonuse that could result in a recommendation of forfeiture or partial forfeiture. 5. (NO) General remark was not required. 6. (NO) Explanatory remark was not required. 7. (YES) Additional condition was required. 8. (YES) Wanted to view the recommended right. 9. (NO) This is not a split right. 10. (NO) This is not a combined right. 11. (NO) Documents were not linked or attached to this file. 12. (YES) Set the verification date.
Summary	11/29/00 1:18:32 PM	bcontor	1. (NO) The basis of the claim is not beneficial use. 3. (NO) There is no indication that there has been a five year period of continuous nonuse that could result in a recommendation of forfeiture or partial forfeiture. 5. (NO) General remark was not required. 6. (NO) Explanatory remark was not required. 7. (YES) Additional condition was required. 8. (YES) Wanted to view the recommended right. 9. (NO) This is not a split right. 10. (NO) This is not a combined right. 11. (NO) Documents were not linked or attached to this file. 12. (YES) Set the verification date.
Use	12/4/00 12:04:37 PM	csaxton	1. (NO) The basis of claim is not beneficial use. 2. (YES) The parent right has a purpose of use. 3. (YES) The claimed purpose of Use can be verified using the water right file. 11. (NO) Purpose of Use remark was not required. 12. (NO) Purpose of Use condition was not required.

IN THE DISTRICT COURT OF THE FIFTH JUDICIAL DISTRICT OF THE STATE OF IDAHO,
IN AND FOR THE COUNTY OF TWIN FALLS

IN RE THE GENERAL ADJUDICATION
OF RIGHTS TO THE USE OF WATER FROM
THE SNAKE RIVER BASIN WATER SYSTEM.

CIVIL CASE NUMBER: 39576

Ident. Number: A31-07262
Date Received: 11/23/1988
Receipt No: E004391
Received By: _____

NOTICE OF CLAIM TO A WATER RIGHT ACQUIRED UNDER STATE LAW

1. Name: SIDNEY ASHCRAFT 208-662-5465
   Address: 2104 E 1800 N
   HAMER, ID 83425
   OR
   Name: JANA ASHCRAFT
   Address:
   HAMER, ID 83425

2. Date of Priority: JUN 13, 1977

3. Source: GROUNDWATER Trib. to:

4. Point of Diversion:

Township	Range	Section	1/4 of 1/4 of 1/4	Lot	County
06N	35E	1	SW NE NE		JEFFERSON

5. Description of diverting works:
   WELL 150' DEEP; PUMP 100 HP, MAINLINE TO CENTER PIVOT

6. Water is used for the following purposes:

Purpose	From	To	C.F.S (or)	A.F.A.
IRRIGATION	03/15	11/15	2.050	

7. Total Quantity Appropriated is:
   2.050 C.F.S. (and/or) A.F.A.

8. Total consumptive use is 330.0 Acre Feet Per Annum.

9. Non-irrigation uses:

MICROFILMED
NOV 17 1992

10. Place of Use:

Township	Range	Section	1/4 of 1/4		Lot	Use	Acres
06N	35E	1	NE	NE		IRR	33.0
			NW	NE		IRR	33.0
			SW	NE		IRR	33.0
			SE	NE		IRR	33.0
						Section Acres	132.0
						Total Acres	132.0

11. Place of use in counties: JEFFERSON

12. Do you own the property listed above as place of use? YES

13. Other Water Rights Used:
NONE

14. Remarks:

15. Basis of Claim: LICENSE
Water Right Number: 317262

MICROFILMED
NOV 17 1992

16. Signature(s)

(a.) By signing below, I/We acknowledge that I/We have received, read and understand the form entitled "How you will receive notice in the Snake River Basin Adjudication." (b.) I/We do ____ do not ____ wish to receive and pay a small annual fee for monthly copies of the docket sheet.

Number of attachments: _____

For Individuals:

I/We do solemnly swear or affirm that the statements contained in the foregoing document are true and correct.

Signature of Claimant(s): _____ Date: _____

_____ Date: _____

State of Idaho)
) SS.
County of _____)

Subscribed and sworn (or affirmed) before me this _____ day

of _____ 19 _____

_____
Notary Public

Seal

Residing at _____

My Commission Expires _____

MICROFILMED
NOV 17 1992

New Circle

Form No. 42-1409 (2) a 1/88

18.00

IN THE DISTRICT COURT OF THE FIFTH JUDICIAL DISTRICT OF THE STATE OF IDAHO, IN AND FOR THE COUNTY OF TWIN FALLS

IN RE THE GENERAL ADJUDICATION OF RIGHTS TO THE USE OF WATER FROM THE SNAKE RIVER BASIN WATER SYSTEM

CIVIL CASE NUMBER: 39576
Ident. Number A31-07262
Date Received 11-23-88
Receipt Number 600439

NOTICE OF CLAIM TO A WATER RIGHT

ACQUIRED UNDER STATE LAW

Please type or print clearly

1. Name of Claimant (s) Sidney or Jana Asheraft Phone (208) 662-5465
   Mailing Address 2104 E 1800 N Hamer Id Zip 83425
2. Date of Priority (Only one (1) per claim) 6-13-1977
3. Source of water supply (a) Ground water
   which is tributary to (b) _____
4. a. Location of existing point of diversion is: Township 6N Range 35E Section 1, SW 1/4 of NE 1/4 of NE 1/4, Govt. Lot, _____ B.M., County of Jefferson
   Additional points of diversion if any: _____
   b. If instream flow, beginning point of claimed instream flow is:
   Township ~~6N~~ Range ~~35E~~ Section ~~1~~, ~~SW~~ 1/4 of ~~NE~~ 1/4 of ~~NE~~
   Govt. Lot _____ B.M., County of ~~Jefferson~~
   ending point is: Township _____ Range _____ Section _____, _____ 1/4 of _____ 1/4 of _____ 1/4, Govt. Lot _____ B.M., County of _____
5. Description of existing diversion works (Dams, Reservoirs, Ditches, Wells, Pumps, Pipelines, Headgates, Etc), including the dates of any changes or enlargements in use, the dimensions of the diversion works as constructed and as enlarged and the depth of each well. Well 150' deep Pump 100HP mainline to center pivot

A3107262

MICROFILMED
NOV 17 1992

6. Water is claimed for the following purposes:

		(both dates are inclusive)		(cfs)		(acre feet)
For Irrigation	purposes from 3-15	to 11-15	amount 2.05	or		
For	purposes from	to	amount	or		
For	purposes from	to	amount	or		
For	purposes from	to	amount	or		

7. Total quantity claimed (a) 2.05 (cfs) and/or (b) _____ (acre feet)

8. Total consumptive use claimed is 330 acre feet per annum.

9. Non-irrigation uses; describe fully (eg. Domestic: Give number of households served; Stockwater: Type and number of livestock Etc.) _____

10. Description of place of use:
    a. If water is for irrigation, indicate acreage in each subdivision in the tabulation below.
    b. If water is used for other purposes, place a symbol of use (example: D for Domestic) in the corresponding place of use below. See instructions for standard symbols.

TWP	RNG	SEC	NE 1/4				NW 1/4				SW 1/4				SE 1/4				Totals
			NE1/4	NW1/4	SW1/4	SE1/4	NE1/4	NW1/4	SW1/4	SE1/4	NE1/4	NW1/4	SW1/4	SE1/4	NE1/4	NW1/4	SW1/4	SE1/4	
6N	35E	1	33	33	33	33													132

Total number of acres irrigated 132

11. In which county (ies) are lands listed above as place of use located? Jefferson

12. Do you own the property listed above as place of use? Yes ✓ No _____
    If your answer is No, describe in Remarks below the authority you have to claim this water right.

13. Describe any other water rights used at the same place and for the same purposes as described above. _____ or None (✓)

14. Remarks: _____

MICROFILMED
NOV 17 1992

Last Name _____ Ident No. _____

Copies: White -State, Yellow-Claimant

Map of Project: show clearly the point of diversion, place of use, section number, township, and range number.

Scale: 2 inches equals 1 mile

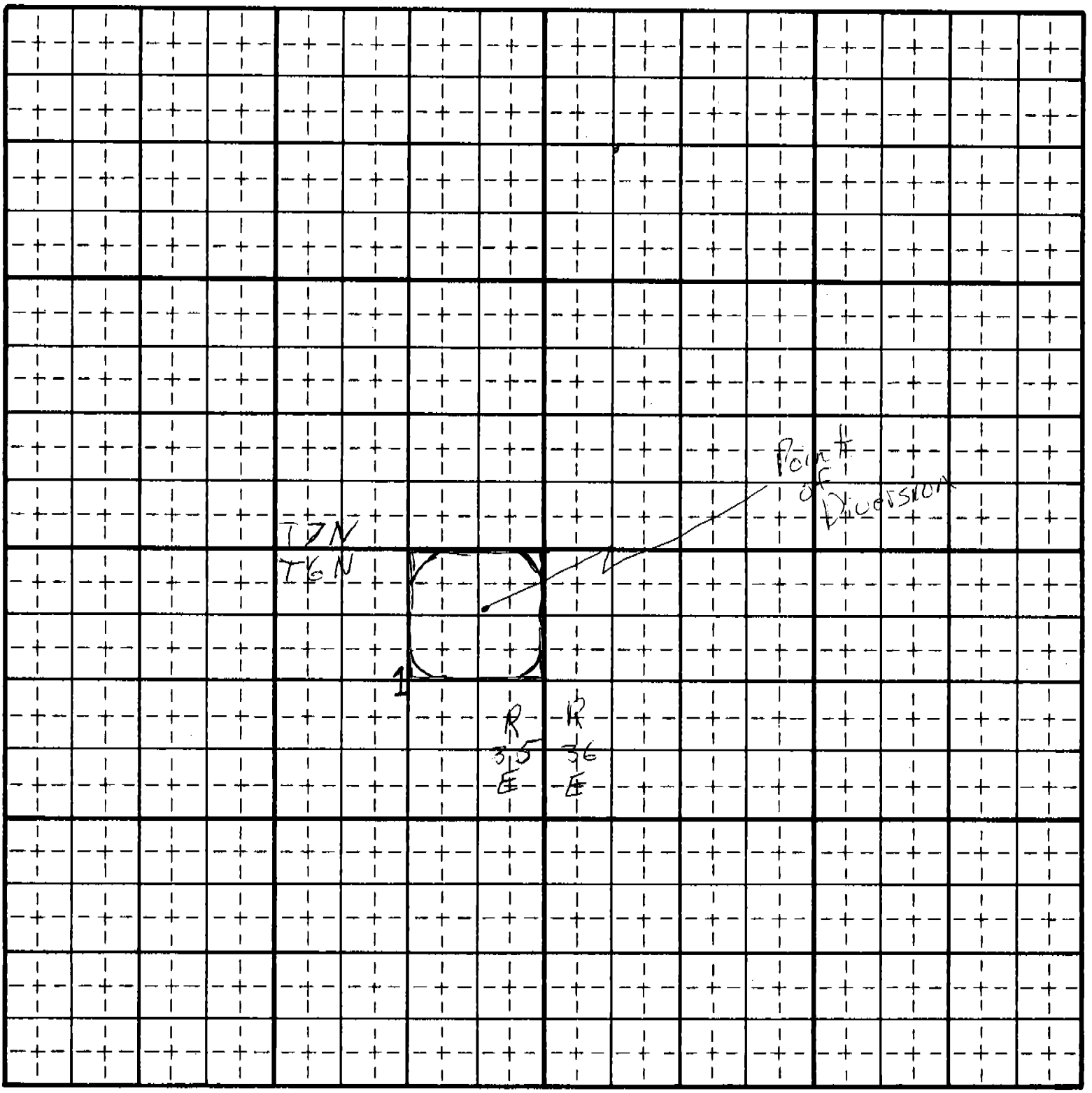

MICROFILMED
NOV 17 1992

Last Name _____ Ident No. _____ *Copies: White-State, Yellow-Claimant*

15. Basis of Claim (check one) Beneficial Use _____ Posted Notice _____ License ✓ Permit _____
Decree _____
If applicable provide IDWR Water Right Number 31-7262
Court _____ Case Number _____ Decree Date _____
Plaintiff vs Defendant _____

16. Signature (s)
(a.) By signing below, I/We acknowledge that I/We have received, read, and understand the form entitled "How you will receive notice in the Snake River Basin Adjudication." (b.) I/We do _____ do not ✓ wish to receive and pay a small annual fee for monthly copies of the docket sheet.
Number of attachments _____

For Individuals: I do solemnly swear or affirm that the statements contained in the foregoing document are true and correct.

Signature of Claimant (s) Sidney Osharaft Date 11-23-88

_____ Date _____

For Organizations: I do solemnly swear or affirm that I am _____
Title
of _____ , that I have signed the foregoing
Organization
document in the space below as _____ of _____
Title Organization
and that the statements contained in the foregoing document are true and correct.

Signature of Authorized Agent _____

Title and Organization _____ Date _____

State of Idaho/or _____)
) SS.
County of Bonneville)

Subscribed and sworn (or affirmed) before me this 23 day of November 19 88

SEAL

Notary Public _____

Residing at Idaho Falls, Id

My Commission Expires 22 Aug 1994

Please Print Name

17. Notice of Appearance:
Notice is hereby given that I, _____ will be acting as attorney at law on behalf of the claimant signing above, and that all notices required by law to be mailed by the director to the claimant signing above should be mailed to me at the address listed below.

Signature _____

Address _____

Date _____

MICROFILMED
NOV 17 1992

Last Name _____ Ident. Number _____

Copies White-State, Yellow-Claimant

STATE OF IDAHO

Department of Water Resources
Eastern Region

Water Right(s): 31-07262 and 31-11641

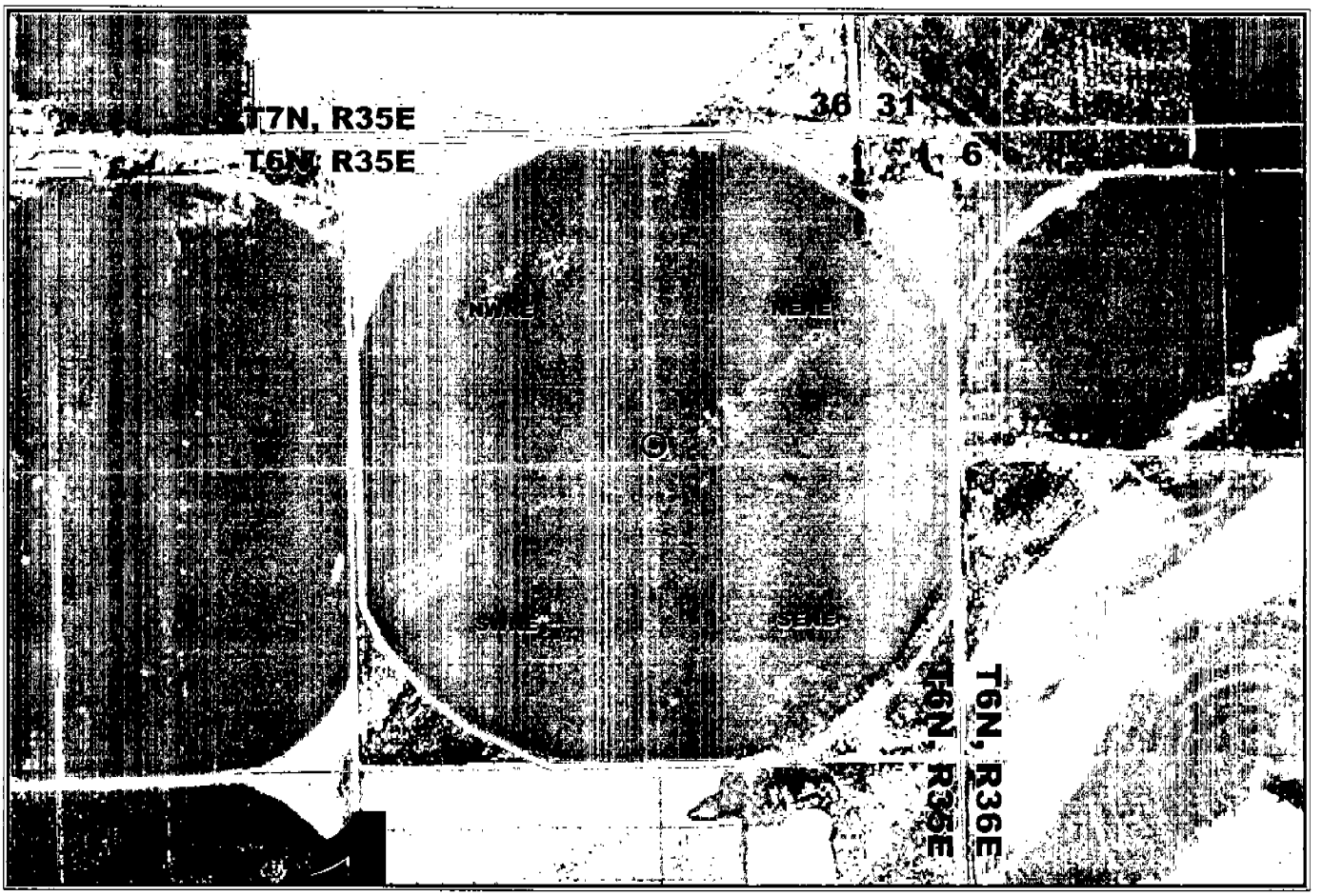

1320 0 1320 Feet

Total Irrigated Acres: 147
Permissible Place of Use

⊙ Point(s) of Diversion

Place of Use

Quater Section Lines

Section Lines

N
W E
S

GIS Place of Use Illustration
1987/1988 Napp photography
Prepared by: C. Saxton
Date: March 2001

Sid Ashcraft

WR #(s): 31-07262, 31-11641

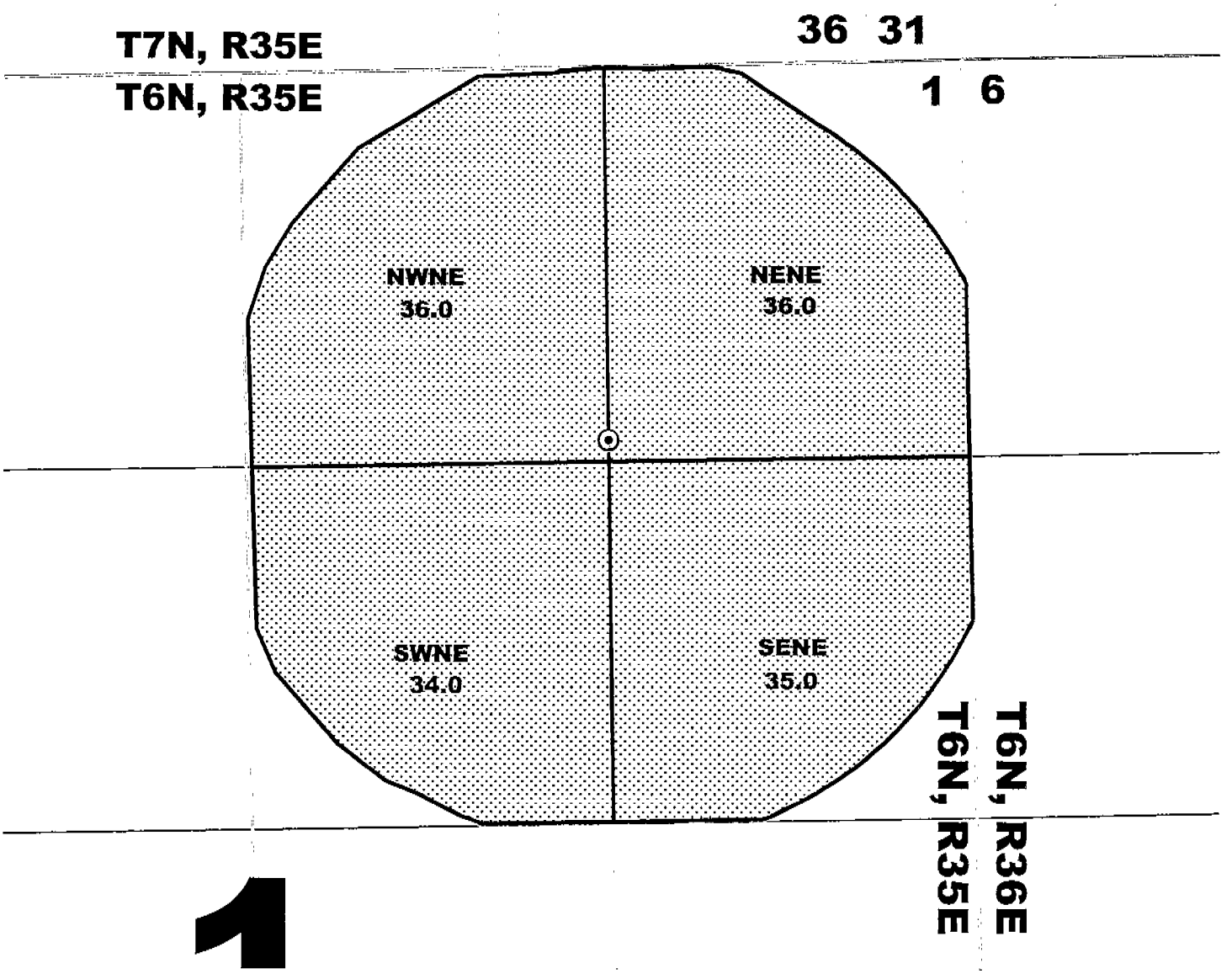

Total Irrigated Acres: 141

⊙ Point of Diversion

▨ Place of Use

Acreage Distribution

Prepared By: Craig Saxton
March 2001

State of Idaho
DEPARTMENT OF WATER RESOURCES
900 N. Skyline Dr., Suite A, Idaho Falls, Idaho 83402-1718 - (208) 525-7161- Fax (208) 525-7177

EASTERN REGION

March 28, 2001

DIRK KEMPTHORNE
GOVERNOR

KARL J. DREHER
DIRECTOR

SIDNEY & JANA ASHCRAFT
2104 E 1800 N
HAMER ID 83425

RE: NOTICE OF ERROR

Dear Mr. and Mrs. Ashcraft:

Water Agent Bryce Contor has finished reviewing your Notice of Error for water right numbers 31-02402, 31-02410, 31-04126, 31-07262, 31-11462, 31-11464 and 31-11641, and has adjusted the claims accordingly.

Enclosed for your records are copies of the recommendations.

If you have any questions feel free to contact Bryce Contor at this office.

Respectfully submitted,

Cheri Vandermeulen

Cheri Vandermeulen
Records Clerk

01/24/2001

NOTICE OF ERROR
REPLY

Please type or print clearly, fill out this form completely and mail.

Return this reply form to IDWR by the deadline date printed below if you want IDWR to change your recommendation or you want to let IDWR know that you agree with its recommendation.

YOUR DEADLINE FOR RETURNING A NOTICE OF ERROR REPLY IS: March 9, 2001

Water right number: 31-7262

SIDNEY ASHCRAFT
2104 E 1800 N
HAMER ID 83425
Telephone Number: (208)662-5464

JANA ASHCRAFT
2104 E 1800 N
HAMER ID 83425

RECEIVED
MAR 0 7 2001
Department of Water Resources
Eastern Region

1. Describe the portion of the proposed recommendation with which you disagree (e.g. priority date, period of use, source):

place of use

2. Describe the changes you wish to make in the proposed recommendation:

put place of use where it is being irrigated

3. Give a brief explanation as to why you disagree with these portions:

____ **I AGREE with this proposed recommendation: no changes need to be made.**

DATE: 3-6-01 **SIGNATURE:** Sidney N Ashcraft

Please print your name: _____

IDWR Regional Office, 900 N Skyline, Idaho Falls, ID 83402, 2085257161

Response!

Enlargement 31-11641 will be reviewed & considered.

Bac 3/12/01

State of Idaho
DEPARTMENT OF WATER RESOURCES
900 N. Skyline Dr., Suite A, Idaho Falls, Idaho 83402-1718 - (208) 525-7161- Fax (208) 525-7177

EASTERN REGION
Date 12/4/07

DIRK KEMPTHORNE
GOVERNOR

KARL J. DREHER
DIRECTOR

Sid Ashcraft
2104 E 1500 N
Hamer ID 83425

Re: Adjudication Claim(s) 31-7262

Dear Water Users:

We are currently in the process of reviewing Adjudication Claims in Basin 31, in preparation for submitting recommendations to the Snake River Basin Adjudication Court.

In reviewing your claim(s) listed above, it appears the irrigated acreage exceeds what is authorized by the claims(s). To provide for irrigation of the additional acres, you need to file an "enlargement claim" or perhaps amend the claim(s) listed above.

Please contact me at (208) 525-7161 if you have further questions or would like to make an appointment ot file or amend a claim.

Sincerely,

Bryce A. Contor
Senior Water Resource Agent

State of Idaho
DEPARTMENT OF WATER RESOURCES
900 N. Skyline Dr., Suite A, Idaho Falls, Idaho 83402-1718 - (208) 525-7161- Fax (208) 525-7177

EASTERN REGION

Date 11/29/00

DIRK KEMPTHORNE
GOVERNOR

KARL J. DREHER
DIRECTOR

Sid Ashcraft
2104 E 1800 N
Hamer ID 83425

Re: Adjudication Claim(s) A31-7262

Dear Water Users:

We are currently in the process of reviewing Adjudication Claims in Basin 31, in preparation for submitting recommendations to the Snake River Basin Adjudication Court.

In reviewing your claim(s) listed above, it appears the irrigated acreage exceeds what is authorized by the claims(s). To provide for irrigation of the additional acres, you need to file an "enlargement claim" or perhaps amend the claim(s) listed above.

Please contact me at (208) 525-7161 if you have further questions or would like to make an appointment ot file or amend a claim.

Sincerely,

Bryce A. Contor
Senior Water Resource Agent

To: Sid Ashcraft Files
Fr: Bryce Contor
Date: 11/20/2000

Re: PODs and Diversion Rates

Diversion	PLS	NWMD ID #	Measurement	Confidence
#1	7N 36E 1 NWNENW	300272	2.22 cfs	Fair
#2	7N 36E 1 NWSWSW	300273	2.76 cfs[1]	Fair
#3	6N 36E 6 NW	300828	1.66 cfs	Good
#4	6N 35E 1 SWNENE	300070	2.02 cfs	Good
#5	6N 35E 1 NESE	300831	1.96 cfs	Good
#6	6N 35E 1 SENW	300069	2.02 cfs	Good[2]
#7	6N 35E 1 NWSW	300068	3.22 cfs	Excellent[2]
#8	6N 35E 12 NWNE	300827	2.02 cfs	Excellent
#9	6N 35E 2 SWNESW	300830	not measured; co-mingled w/ MLWU rights out of same well.	
#10, 11	6N 35E 12 SWNW	300076	4.36 cfs	Fair

[1] Calculated full capacity flow, based on measured flow at part capacity. See NWMD file for complete calculation.
[2] Not recorded in NWMD records; determination made based on my recollection of performing the measurements.

Idaho Department of Water Resources

Sid Ashcraft Diversions

Township 6N and 7N Range 35E and 36E

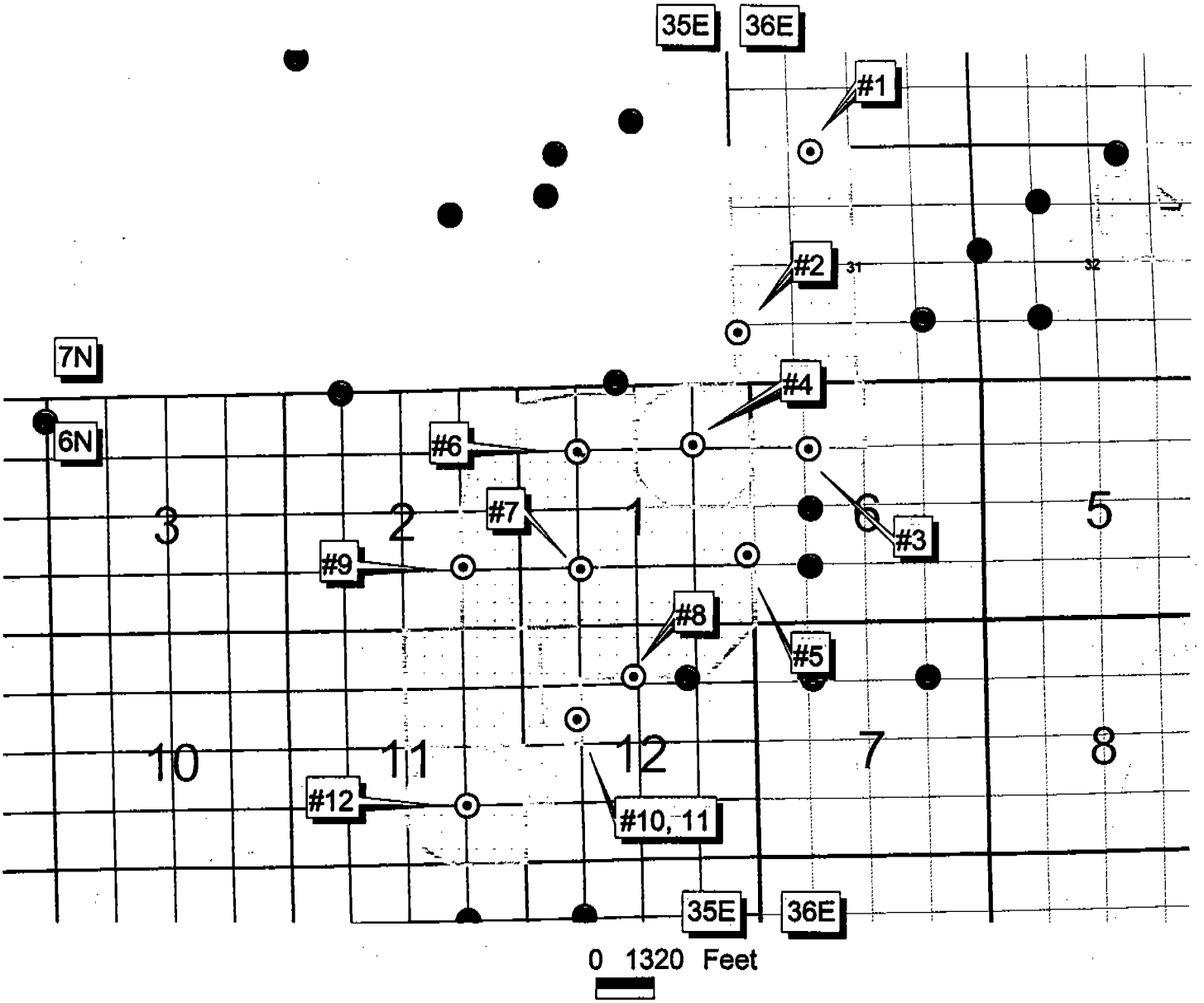

- Point of Diversion
- Point of Diversion - Other Rights
- Place of Use
- Place of Use - Other Rights
- Quarter-quarter Sections
- Section Lines

N
W
E
S

GIS Illustration prepared from 1987/1988 NAPP photography by B. Contor 11/2000

To: Sid Ashcraft Files
Fr: Bryce Contor
Date: 11/22/2000

Re: Documentation

See file 31-2410 for additional documentation of all Sid Ashcraft recommendations except the west pivots in 6N 33E.

State of Idaho

Department of Water Resources

WATER RIGHT LICENSE

License of Water Right No. 31-7262 Priority 6/13/1977 Amount 2.05 cfs

THIS IS TO CERTIFY, that ERLE V. PETERSON of Hamer, ID has complied with the terms and conditions of Permit No. 31-7262 issued pursuant to Application for Permit dated 6/13/1977 and has submitted proof to the Department of Water Resources on 5/17/1979 that he has applied water to a beneficial use, an examination by the Department indicates that the works have a capacity for the diversion of 2.05 cfs of water from a groundwater source tributary to and that the permit holder has applied to a beneficial use and established a right to use water as follows:

Beneficial Use	Period of Use	Rate of Diversion	Annual Volume
Irrigation	from 4/1 to 10/30	at 2.05 cfs	and 396.0 AF
	from to	at cfs	and
	from to	at cfs	and

(both dates inclusive)

Subject, however, to the condition that no more than 2.05 cfs of water be diverted at any one time, and that the amount of water so diverted and to which such right is entitled and acquired is for the purpose aforementioned and is limited to the amount which can actually be beneficially used and shall not exceed 396.0 acre feet per year, said waters to be diverted within the NENE, Sec. 1, T6N, R35E in the County of Jefferson.

Description and location of place of use:

Twp.	Range	Sec.	NE¼				NW¼				SW¼				SE¼				Total
			NE¼	NW¼	SW¼	SE¼	NE¼	NW¼	SW¼	SE¼	NE¼	NW¼	SW¼	SE¼	NE¼	NW¼	SW¼	SE¼	
6N	35E	1	33	33	33	33													132

Total number of acres irrigated 132

NOTE: Modifications to or variance from this license must be made within the limits of Section 42-222, Idaho Code, or the applicable Idaho Law. This right may be forfeited by five years of non-use.

The right to the use of the water hereby confirmed is restricted and appurtenant to the lands or place of use herein described, as provided by the laws of Idaho.

Witness the seal and signature of the Director, affixed at Boise, Idaho, this 29th day of May, 19 81.

Director

DEPARTMENT OF WATER RESOURCES
FIELD REPORT

1. Name of permit holder Eile F. Peterson

   Post office address 5 Brandywine Blvd., Wilmington, Delaware Phone _____

   Person to contact _____ Phone 302-762-4825

2. Source of water supply: Groundwater X Surface water ☐ _____ (name spring, stream, etc.)

   Tributary to _____

3. Water will be used for the following purposes:

   Permit shows 2.5 Amount 2.60 c.f.s. for irrigation
   _____ AF/Annum (nature of use)

   Period of Use: from 4-1 to 10-30 (mo.-day) inclusive (mo.-day)

   Amount _____ c.f.s. for _____
   _____ AF/Annum (nature of use)

   Period of Use: from _____ to _____ (mo.-day) inclusive (mo.-day)

   Amount _____ c.f.s. for _____
   _____ AF/Annum (nature of use)

   Period of Use: from _____ to _____ (mo.-day) inclusive (mo.-day)

   Other uses: _____

Permit No. 31-7626
Examination for
JUN 22
Department of Water Resources
Dept. of Water Office
D/C

4. Total amount to be appropriated:

   Max Rate of Diversion 2.5 cubic feet per second and annual volume _____ AF/Annum.

5. Location of Points of Diversion:

   Township 6N N/S Range 35E E/W B.M., Section 1 Subdivision NE ¼ NE ¼ Jefferson County

   Township _____ N/S Range _____ E/W B.M. Section _____ Subdivision _____ ¼ _____ ¼ _____ County

   Township _____ N/S Range _____ E/W B.M. Section _____ Subdivision _____ ¼ _____ ¼ _____ County

   Other Points of Diversions _____

Description of diverting works 12" x 145', 100 Hp motor

Measuring device required: Yes X no ☐

6. Lands to be irrigated or place of use

TWP	RANGE	SEC	NE¼				NW¼				SW¼				SE¼				TOTALS
			NE¼	NW¼	SW¼	SE¼	NE¼	NW¼	SW¼	SE¼	NE¼	NW¼	SW¼	SE¼	NE¼	NW¼	SW¼	SE¼	
6N	35E	1	40	40	40	40													160

TOTAL ACREAGE _____ 160

Rge 3 E

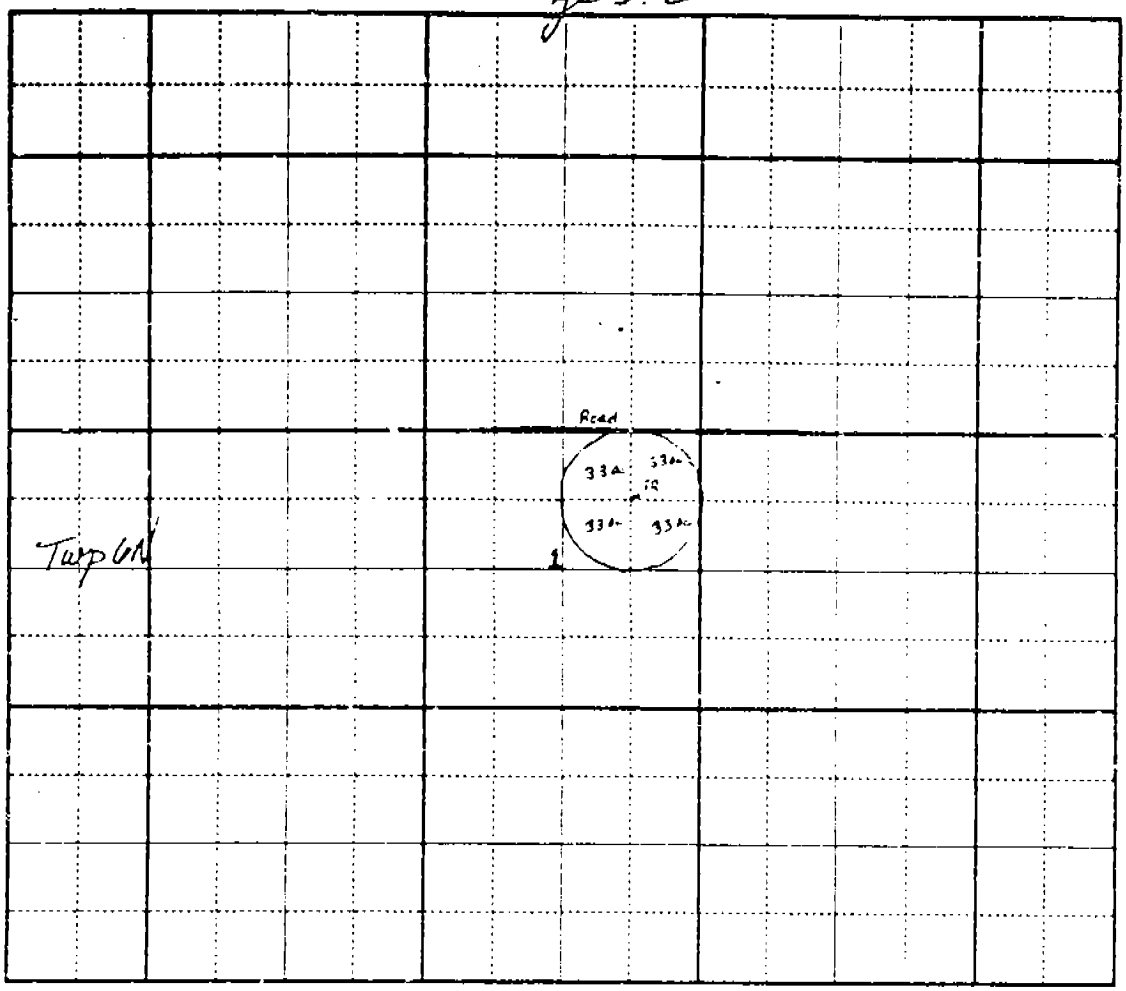

Diagram of System

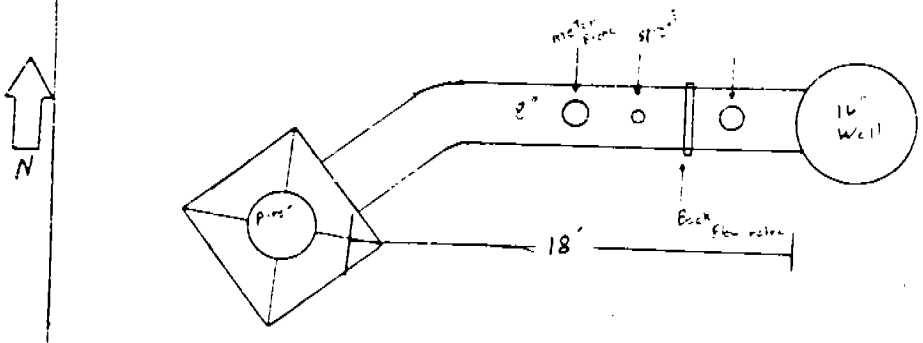

J.D.C.

DATE OF EXAM 7/19/79

ACREAGE
Found 132 Ac. ✓
Recommended 132 Ac ✓

Irrigation Requirement 3.0 Ac Ft/Ac

USE
Irrigation Q= 2.05 ✓ c.f.s. V= 396 ✓ AF/Ann. from April 1 to Oct 30
Domestic Q= c.f.s. V= AF/Ann. from to
Livestock Q= c.f.s. V= AF/Ann. from to

Is water co-mingled? yes no X

Name source: N/a
twp. N/S, Rge E/W, B.M., Sec. Sub ¼ ¼ County

Exchange? yes no X

Name source exchanged with: N/a
twp. N/S, Rge E/W, B.M., Sec. Sub ¼ ¼ County

Point of injection: N/a
twp. N/S, Rge E/W, B.M., Sec. Sub ¼ ¼ County

Point of exchange: N/a
twp. N/S, Rge E/W, B.M., Sec. Sub ¼ ¼ County

Total Q measured 2.05 cfs Method of measurement Annabar

Total Q recommended 2.05 cfs Meter No. Mark 75 Type 8" [illegible] Condition New

Total V recommended 396 AF/Ann.

Recommended Amendments:

P.D.
Place of Use
Other
None

MEASUREMENT CALCULATION:
(pipe ID") C √inches of HCH = (8)(3.85)√14 = (64)(3.85)(3.74) 922 gpm = 2.05 cfs capacity
132 Ac x 3.0 Ac ft/Ac = 396 Ac ft/Ann < 2.05 cfs x 1.9835 [illegible] x 212 [illegible] = 862 AF/Ann.

SYSTEM DESCRIPTION:
Groundwater is diverted by an U.S. [illegible] motor [illegible] ID# [illegible] and a [illegible] model [illegible] 18' [illegible] 1340'

REMARKS:
The [illegible] was broken at time of examination.
The [illegible]

Examiner's Signature John D. Carlson Date 1/3/80
Checked by Anthony F. [illegible] Date 2-22-80
Approved by Rolyn Date 4/22/81

State of Idaho
DEPARTMENT OF WATER RESOURCES
STATE OFFICE, 450 W. State Street, Boise, Idaho

JOHN V. EVANS
Governor

A. KENNETH DUNN
XXXXXXXXXX
Director

Mailing address:
Statehouse
Boise, Idaho 83720
(208) 334-4440

April 22, 1981

Erle V. Peterson
5 Brandywine Blvd
Wilmington, Delaware 19809

Dear Mr. Peterson,

A representative of this Department has made an examination of the works covered by your Permit No. 31-7262 , and has found the following:

Amount of water that can be recognized as beneficially used under Idaho law: 2.05 cfs Source: groundwater

The maximum quantity diverted shall not exceed 396 acre feet per year.

Point(s) of diversion: NE¼NE¼, Sec. 1, Twp. 6N, Rge. 35E, B.M.

Beneficial use: Irrigation of 132 acres within the NE¼, Sec. 1, Twp. 6N, Rge. 35E.

Priority date established: June 13, 1977

Conditions (if any):

If you do not concur with these findings please contact us within 10 days, otherwise a water license will be issued as set forth above.

Sincerely,

JIM JOHNSON
Water Distribution Supervisor

CONVERSATION MEMORANDUM

DATE 5/8/1981 3:00 pm

FILE 31-7262

NAME OF PARTY Ernie - Eastern

EMPLOYEE Robyn Carlson

RE: 10 Day Letter

Mr Peterson was in Ernie's office today & is going to check out the capacity of the Lovell waters, before we license. Ernie will call back around 5/13/81 to tell us if a re exam is necessary.

I sent a copy of the field Exam to Eastern

5/13/81 Ernie called & said Mr Peterson was agreed with the field exam. RC

State of Idaho

Department of Water Resources

WATER RIGHT LICENSE

License of Water Right No. 31-7262 Priority 6/13/1977 Amount 2.05 cfs

THIS IS TO CERTIFY, that ERLE V. PETERSON

of Hamer, ID, has complied with the terms and conditions of Permit No. 31-7262 issued pursuant to Application for Permit dated 6/13/1977, and has submitted proof to the Department of Water Resources on 5/17/1979, that he has applied water to a beneficial use; an examination by the Department indicates that the works have a capacity for the diversion of 2.05 cfs of water from a groundwater source, tributary to _____, and that the permit holder has applied to a beneficial use and established a right to use water as follows:

Beneficial Use	Period of Use	Rate of Diversion	Annual Volume
Irrigation	from 4/1 to 10/30	at 2.05 cfs	and 396.0 AF
	from _____ to _____	at _____ cfs	and _____
	from _____ to _____	at _____ cfs	and _____

(both dates inclusive)

Subject, however, to the condition that no more than 2.05 cfs of water be diverted at any one time, and that the amount of water so diverted and to which such right is entitled and confirmed is for the purpose aforementioned and is limited to the amount which can actually be beneficially used and shall not exceed 396.0 acre feet per year, said waters to be diverted within the NENE, Sec. 1, T6N, R35E in the County of Jefferson.

Description and location of place of use:

Twp.	Range	Sec.	NE¼				NW¼				SW¼				SE¼				Totals
			NE¼	NW¼	SW¼	SE¼	NE¼	NW¼	SW¼	SE¼	NE¼	NW¼	SW¼	SE¼	NE¼	NW¼	SW¼	SE¼	
6N	35E	1	33	33	33	33													132

Total number of acres irrigated 132

NOTE: Modifications to or variance from this license must be made within the limits of Section 42-222, **Idaho Code**, or the applicable Idaho Law. This right may be forfeited by five years of non-use.

The right to the use of the water hereby confirmed is restricted and appurtenant to the lands or place of use herein described, as provided by the laws of Idaho.

Witness the seal and signature of the Director, affixed at Boise, Idaho, this 29th day of May, 19 81.

MICROFILMED

Director

10-27-90
P.O. Box 248
Hamer, Id 83425
New Address

Identification No. 31 7262
Application No. _____

STATE OF IDAHO
DEPARTMENT OF WATER RESOURCES
APPLICATION FOR PERMIT

APPROVED

To Appropriate the Public Waters of the State of Idaho
(TYPE OR PRINT IN INK)

1. Name of applicant Erle V. Peterson Phone: 302-762-4825
   post office address ~~5 Brandywine Blvd., Wilmington, Delaware 19809~~
2. Source of water supply Ground water which is a tributary of _____
3. a. Location of point of diversion is NE ¼ of NE ¼ of Section 1 Township 6N
   Range 35 E. B.M. Jefferson County; additional points of diversion if any: _____
   b. If water is not consumed, it will be discharged into _____ at a point in _____ ¼
   of _____ ¼ of Section _____ Township _____ Range _____ B.M. _____
4. Water will be used for the following purposes:
   Amount 2.5cfs (cfs or acre-feet per annum) for irrigation purpose from April 1 to Oct 30 (both dates inclusive)
   Amount _____ (cfs or acre-feet per annum) for _____ purpose from _____ to _____ (both dates inclusive)
   Amount _____ (cfs or acre-feet per annum) for _____ purpose from _____ to _____ (both dates inclusive)
5. Total quantity to be appropriated:
   a. 2.5 cubic feet per second and/or
   b. _____ acre feet per annum.
6. Proposed diverting works:
   a. Description of ditches, flumes, pumps, headgates, etc. Well with pump and sprinkler equipment
   b. Height of storage dam _____ feet, active reservoir capacity _____ acre feet; total reservoir capacity _____ acre feet, materials used in storage dam: _____
   Period of year during which storage will occur _____ (Mo. Day) to _____ (Mo. Day) inclusive.
   c. Proposed well diameter is 16 inches; proposed depth of well is 145 feet.
7. a. Time required for the completion of the works and application of the water to the proposed beneficial use is 5 years.
   b. Estimated construction cost is $ 45,000.00.
8. Description of proposed uses:
   a. If water is **not** for irrigation:
      (1) Give the place of use of water: _____ ¼ of _____ ¼ of Section _____ Township _____
      Range _____ B.M.
      (2) Amount of power to be generated: _____ hp under _____ feet of head.
      (3) List number of each kind of livestock to be watered _____
      (4) Name of municipality to be served _____, or number of families to be supplied with domestic water _____.
      (5) If water is to be used for other purposes describe: _____

b. If water is for irrigation, indicate acreage in each subdivision in the tabulation below:

TWP.	RANGE	SEC.	NE¼				NW¼				SW¼				SE¼				TOTALS
			NE¼	NW¼	SW¼	SE¼	NE¼	NW¼	SW¼	SE¼	NE¼	NW¼	SW¼	SE¼	NE¼	NW¼	SW¼	SE¼	
6N	35E	1	40	40	40	40													160

Total number of acres to be irrigated 160

c. Describe any other water rights used for the same purposes as described above.

9. a. Who owns the property at the point of diversion Applicant

b. Who owns the land to be irrigated or place of use Applicant

c. If the property is owned by a person other than the applicant, describe the arrangement enabling the applicant to make this filing

10. Remarks

11. Map of proposed project: show clearly the proposed point of diversion, place of use, section number, township and range number.

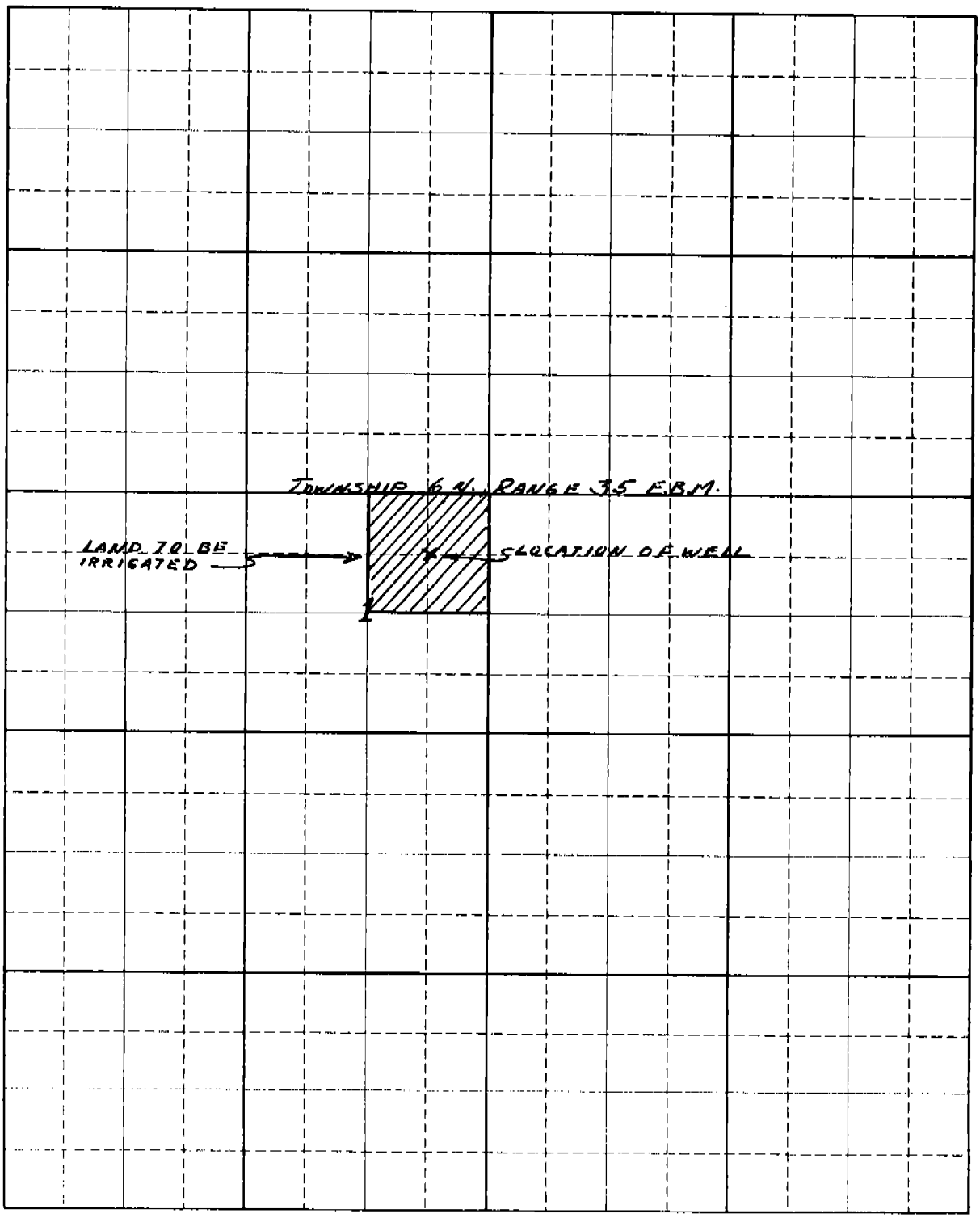

Scale: 2 inches equal 1 mile

BE IT KNOWN that the undersigned hereby makes application for permit to appropriate the public waters of the State of Idaho as herein set forth.

Earl C. Peterson
(Applicant)

Proposed Priority 6/13/77

Received by CW Date 6-13-77 Time 11:10 A

Preliminary check by EMC Fee $ 45.00

Receipted by CW Date 6-28-77 #8002

Publication prepared by CW Date 6-30-77

Published in Rigby Star

Publication dates July 7 & 14-1977

Publication approved ME Date July 18, 1977

Priority reduced to _____ Reason _____

Protests filed by: _____

Copies of protests forwarded by _____

Hearing held by _____ Date _____

Recommended for approval denial by _____

ACTION OF THE DIRECTOR, DEPARTMENT OF WATER RESOURCES

This is to certify that I have examined Application for Permit to appropriate the public waters of the State of Idaho No. 31-7262, and said application is hereby APPROVED.

1. Approval of said application is subject to the following limitations and conditions:

   a. SUBJECT TO ALL PRIOR WATER RIGHTS.

   b. Proof of construction of works and application of water to beneficial use shall be submitted on or before August 1, 19 82.

   c. Other: For licensing purposes a scientific measurement of the diversion rate of the system as it is normally operated shall be provided by either properly installing an approved type of measuring device or by having a professional engineer certify the rate of diversion to the Department prior to submitting proof of beneficial use of water.

Witness my hand this 22 day of August 19 77.

Deputy Director

EPARTMENT OF WATER RESOURC

FIELD REPORT

1. Name of permit holder Esle C. Peterson

Post office address 5 Brandywine Blvd., Wilmington, Delaware Phone

Person to contact Phone 302-762-4825

2. Source of water supply: Groundwater ☒ Surface water ☐

(name spring, stream, etc.)

Tributary to

3. Water will be used for the following purposes:

Permit shows 2.5 Amount 2.68 c.f.s. for irrigation

AF/Annum (nature of use)

Period of Use: from 4-1 to 10-30

(mo.-day) inclusive (mo.-day)

RECEIVED

JUN 22 19[illegible]

Department of Water Resources
Eastern District Office

Permit No. 21-78162

Examination

Amount c.f.s. for

AF/Annum (nature of use)

Period of Use: from to

(mo.-day) inclusive (mo.-day)

Amount c.f.s. for

AF/Annum (nature of use)

Period of Use: from to

(mo.-day) inclusive (mo.-day)

Other uses:

4. Total amount to be appropriated:

Max Rate of Diversion 2.5 cubic feet per second and annual volume AF/Annum.

5. Location of Point(s) of Diversion:

Township 6N N/S, Range 35E E/W, B.M., Section 1, Subdivision NE ¼ NE ¼ Jefferson County

Township N/S, Range E/W, B.M., Section, Subdivision ¼ ¼, County

Township N/S, Range E/W, B.M., Section, Subdivision ¼ ¼, County

Other Points of Diversions:

Description of diverting works: 12" x ~~#~~, 145', 100 Hp motor

Measuring device required: yes ☒ no ☐

6. Lands to be irrigated or place of use.

TWP.	RANGE	SEC.	NE¼				NW¼				SW¼				SE¼				TOTALS
			NE¼	NW¼	SW¼	SE¼	NE¼	NW¼	SW¼	SE¼	NE¼	NW¼	SW¼	SE¼	NE¼	NW¼	SW¼	SE¼	
6N	35E	1	40	40	40	40													160

MICROFILMED

TOTAL ACREAGE 160

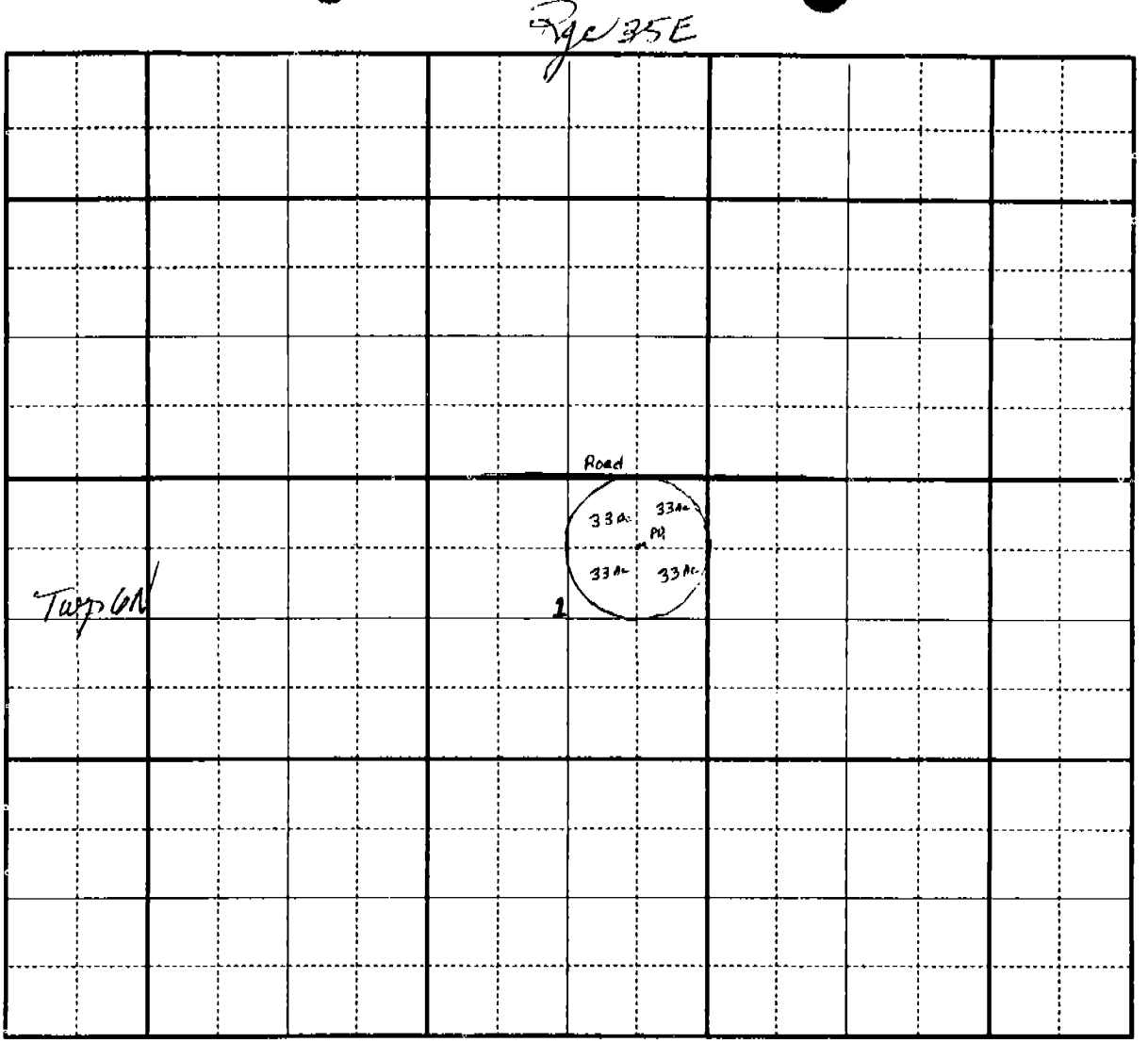

Diagram of System

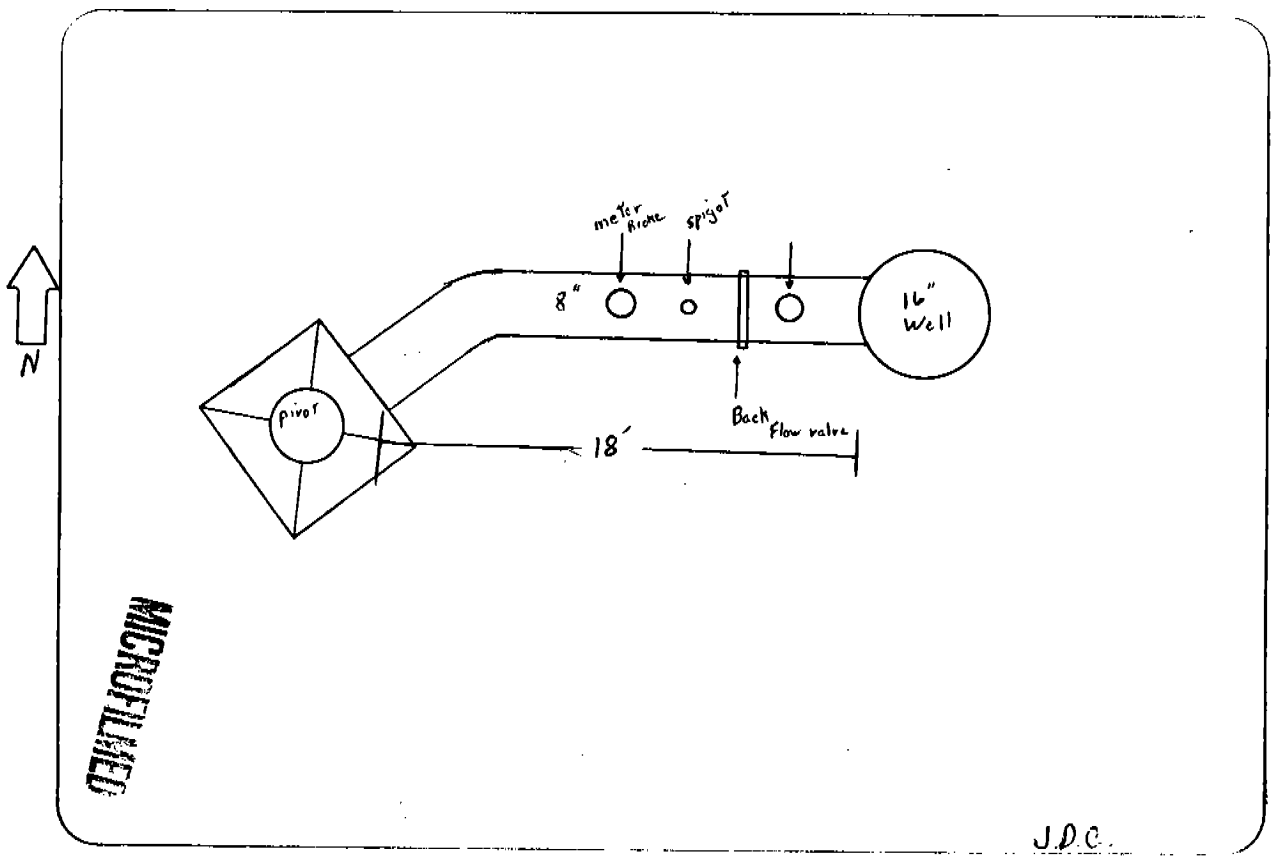

DATE OF EXAM 7/19/79

ACREAGE
Found 132 Ac. ✓
Recommended 132 Ac ✓

Irrigation Requirement 3.0 Ac Ft/Ac

USE
Irrigation Q= 2.05 ✓ c.f.s. V= 396 ✓ AF/Ann. from April 1 to Oct 30
Domestic Q= c.f.s. V= AF/Ann. from to
Livestock Q= c.f.s. V= AF/Ann. from to

Is water co-mingled? yes no X

Name source: N/a
twp. N/S, Rge E/W, B.M., Sec. , Sub. ¼ ¼ County

Exchange? yes no X

Name source exchanged with: N/a
twp. N/S, Rge E/W, B.M., Sec. , Sub. ¼ ¼ County

Point of injection: N/a
twp. N/S, Rge E/W, B.M., Sec. , Sub. ¼ ¼ County

Point of exchange: N/a
twp. N/S, Rge E/W, B.M., Sec. , Sub. ¼ ¼ County

Total Q measured 2.05 cfs Method of measurement Annubar

Total Q recommended 2.05 cfs Meter No. Model 75 Type 8" Eagle type meter Condition New

Total V recommended 396 AF/Ann.

Recommended Amendments:

P.D.
Place of Use
Other
None

MEASUREMENT CALCULATION:
(pipe ID") C √inches of HOH = (8")(3.85)√14. = (64)(3.85)(3.74) = 922 gpm = 2.05 cfs CAPACITY
132 Ac x 3.0 Acft/Ac = 396 ✓ Acft/Ann. < 2.05 cfs x 1.9835 cfs/Acft/dy x 212 dys = 862 AF/Ann.

SYSTEM DESCRIPTION:
Groundwater is diverted by an U.S. Electric motor, High Thrust 100 hp. ID# R-998300-834 R209A789, and a pump of unknown make and model. 8" pipe 18' to a 10 Tower Raincat center pivot with sidegun. watering radius 1340'.

REMARKS:
McCrometer flow meter was broken at time of examination.
No conflicting water rights

Examiner's Signature John D. Carlson Date 1/3/80
Checked by Anthony R. Kozlowski Date 2-22-80
Approved by Rolyn Date 4/22/81

MICROFILMED

10/27/1988 SRBA CLAIMS RECEIVING CHECKLIST

CLAIMANT'S NAME Sid Ashcroft CLAIM IDENT. NO. A31-07262

DATE RECEIVED 11-23 CK # AMOUNT $

	YES	NO
1. Is the name and address complete with zip code?	✓	
2. Is a priority date entered?	✓	
Is the water use exempt from the Permit requirements, or if it is not exempt, has a Permit been approved or a License issued? A Permit is required: (1) for groundwater developed after March 25, 1963 (except single family domestic and stockwater wells using less than 13,000 gpd), or (2) for surface water developed after May 20, 1971 (except for instream stockwater). USE CARE IF CLAIM IS RETURNED. REFER TO ADJUDICATION MEMOS # 1 (ADJ. CLAIMS/APPLICATIONS) AND # 9 (REJECTION OF CLAIMS). EXPLAIN IN COMMENTS.	✓	
3. (a) Is a source entered?	✓	
(b) Is a tributary to entered? (if required) N/A	✓	
4. Is the legal description of the p.d. sufficient?	✓	
5. Is there a description of the diverting works?		
6. Are the water uses appropriate for the form? The short form is limited to domestic and stockwater uses with direct diversion. All claims that include storage or instream stockwater must use long form.	✓	
Is the period of use included?	✓	
Is a quantity claimed for each use?	✓	
7. Is a total quantity claimed entered?	✓	
8. If required is a consumptive use entered? N/A ✓		
Is the consumptive use correct? N/A ✓		
9. Are the non-irrigation uses listed properly? If this claim is on the short form, and more than one domestic use is listed, single ownership must be stated. If not under single ownership, see Adjudication Memo # 4. N/A ✓		
10. Is (are) the place(s) of use entered?	✓	
11. Is (are) the county(ies) entered?	✓	
12. Is the ownership of p.u. checked?	✓	
13. Are other water rights listed or "none" indicated?		
14. If required, are remarks correct? (If the claimant does not own the place of use, authority for filing the claim must be explained in the remarks.) N/A ✓		
15. Is the basis of the claim checked?	✓	
16. Is the claim signed by the claimant, and is the signature appropriate? (If an individual is the claimant, has that individual signed the claim, or if an organization is the claimant, is the organization signature block complete?)	✓	
Has the claim been signed, sealed, and dated by a notary?	✓	
Was this claim filed on time, or was an extension granted?	✓	
Is the fee enclosed correct? Exempt	✓	
If this claim is based on an existing water right, has the identification number been entered? N/A ✓	✓	
Should this claim be receipted and data entered?	✓	

Claim checked by: ES

Comments:

MICROFILMED

NOV 17 1992